Fuji Electric

Innovating Energy Technology

High Performance Inverter

FRENIC-Ace

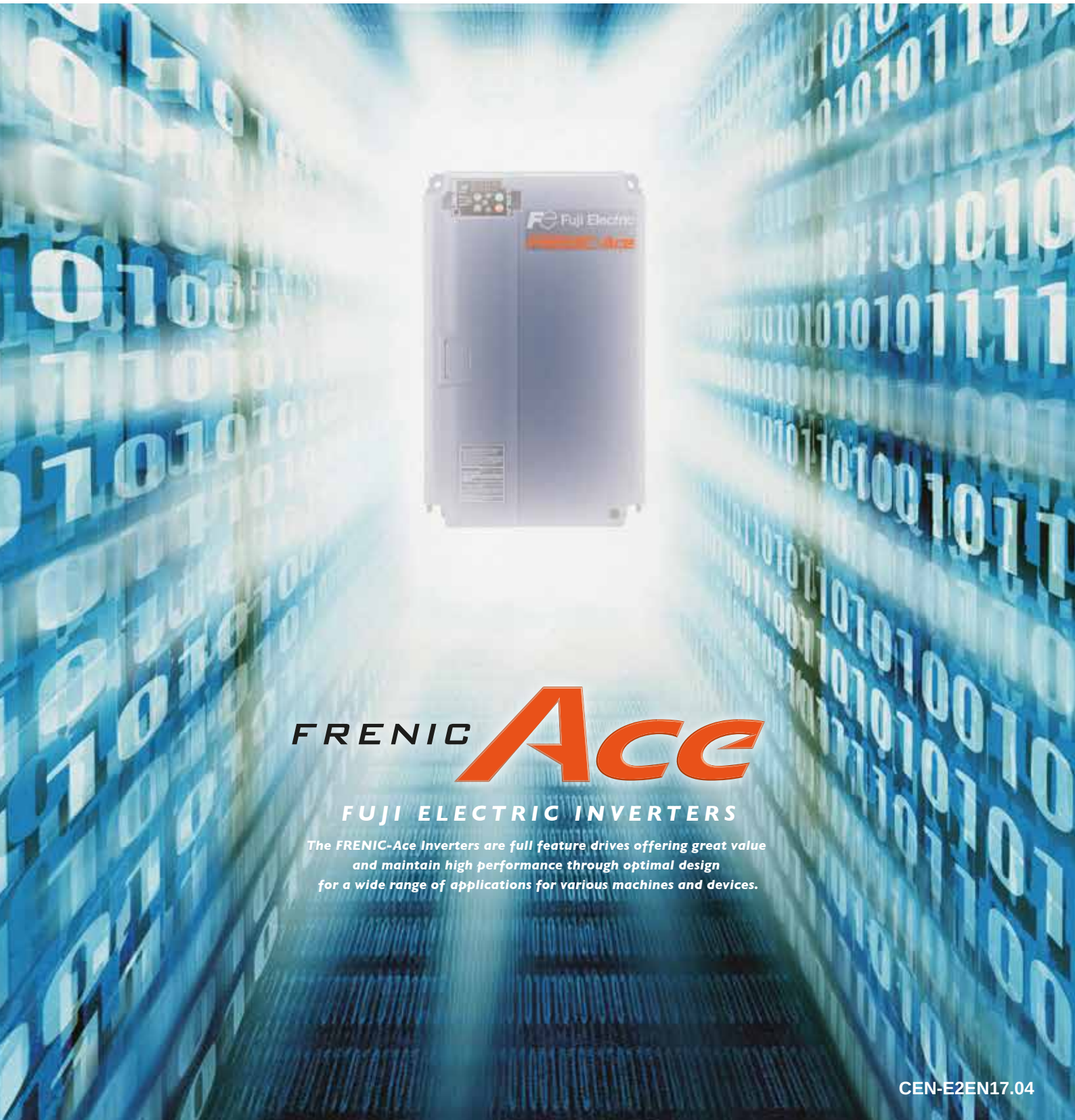

CEN-E2EN17.04

The Next Generation Of Inverters Has Arrived

Introducing Our New Standard Inverter!

Enjoy A Full Range Of Applications

The standard inverter for the next generation, the FRENIC-Ace, can be used in most types of application—from fans and pumps to specialized machinery.

Nominal applied motor [kW]	3-phase 400V series								3-phase 200V series				1-phase 200V series	
	ND rating		HD rating		HND rating		HHD rating		HND rating		HHD rating		HHD rating	
	Model	Rated output current	Model	Rated output current	Model	Rated output current	Model	Rated output current	Model	Rated output current	Model	Rated output current	Model	Rated output current
0.1											FRN0001E2■-2□	0.8A	FRN0001E2■-7□	0.8A
0.2									FRN0001E2■-2□	1.3A	FRN0002E2■-2□	1.6A	FRN0002E2■-7□	1.6A
0.4							FRN0002E2■-4□	1.5A	FRN0002E2■-2□	2A	FRN0004E2■-2□	3A	FRN0003E2■-7□	3A
0.75	FRN0002E2■-4□	2.1A	FRN0002E2■-4□	1.8A	FRN0002E2■-4□	1.8A	FRN0004E2■-4□	2.5A	FRN0004E2■-2□	3.5A	FRN0006E2■-2□	5A	FRN0005E2■-7□	5A
1.1			FRN0004E2■-4□	3.4A	FRN0004E2■-4□	3.4A			FRN0006E2■-2□	6A				
1.5	FRN0004E2■-4□	4.1A					FRN0006E2■-4□	4.2A			FRN0010E2■-2□	8A	FRN0008E2■-7□	8A
2.2	FRN0006E2■-4□	5.5A	FRN0006E2■-4□	5A	FRN0006E2■-4□	5A	FRN0007E2■-4□	5.5A	FRN0010E2■-2□	9.6A	FRN0012E2■-2□	11A	FRN0011E2■-7□	11A
3	FRN0007E2■-4□	6.9A	FRN0007E2■-4□	6.3A	FRN0007E2■-4□	6.3A			FRN0012E2■-2□	12A				
3.7							FRN0012E2■-4□	9A			FRN0020E2■-2□	17.5A		
5.5	FRN0012E2■-4□	12A	FRN0012E2■-4□	11.1A	FRN0012E2■-4□	11.1A	FRN0022E2■-4□	13A	FRN0020E2■-2□	19.6A	FRN0030E2S-2□	25A		
7.5			FRN0022E2■-4□	17.5A	FRN0022E2■-4□	17.5A	FRN0029E2■-4□	18A	FRN0030E2S-2□	30A	FRN0040E2S-2□	33A		
11	FRN0022E2■-4□	21.5A	FRN0029E2■-4□	23A	FRN0029E2■-4□	23A	FRN0037E2■-4□	24A	FRN0040E2S-2□	40A	FRN0056E2S-2□	47A		
15	FRN0029E2■-4□	28.5A	FRN0037E2■-4□	31A	FRN0037E2■-4□	31A	FRN0044E2■-4□	30A	FRN0056E2S-2□	56A	FRN0069E2S-2□	60A		
18.5	FRN0037E2■-4□	37A	FRN0044E2■-4□	38A	FRN0044E2■-4□	38A	FRN0059E2■-4□	39A	FRN0069E2S-2□	69A	FRN0088E2S-2□	76A		
22	FRN0044E2■-4□	44A	FRN0059E2■-4□	45A	FRN0059E2■-4□	45A	FRN0072E2■-4□	45A	FRN0088E2S-2□	88A	FRN0115E2S-2□	90A		
30	FRN0059E2■-4□	59A	FRN0072E2■-4□	60A	FRN0072E2■-4□	60A	FRN0085E2■-4□	60A	FRN0115E2S-2□	115A				
37	FRN0072E2■-4□	72A	FRN0085E2■-4□	75A	FRN0085E2■-4□	75A	FRN0105E2■-4□	75A						
45	FRN0085E2■-4□	85A	FRN0105E2■-4□	91A	FRN0105E2■-4□	91A	FRN0139E2■-4□	91A						
55	FRN0105E2■-4□	105A	FRN0139E2■-4□	112A	FRN0139E2■-4□	112A	FRN0168E2■-4□	112A						
75	FRN0139E2■-4□	139A	FRN0168E2■-4□	150A	FRN0168E2■-4□	150A	FRN0203E2■-4□	150A						
90	FRN0168E2■-4□	168A	FRN0203E2■-4□	176A	FRN0203E2■-4□	176A	FRN0240E2■-4□	176A						
110	FRN0203E2■-4□	203A	FRN0240E2■-4□	210A	FRN0240E2■-4□	210A	FRN0290E2■-4□	210A						
132	FRN0240E2■-4□	240A	FRN0290E2■-4□	253A	FRN0290E2■-4□	253A	FRN0361E2■-4□	253A						
160	FRN0290E2■-4□	290A	FRN0361E2■-4□	304A	FRN0361E2■-4□	304A	FRN0415E2■-4□	304A						
200	FRN0361E2■-4□	361A	FRN0415E2■-4□	377A	FRN0415E2■-4□	377A	FRN0520E2■-4□	377A						
220	FRN0415E2■-4□	415A	FRN0520E2■-4□	415A	FRN0520E2■-4□	415A	FRN0590E2■-4□	415A						
250			FRN0590E2■-4□	477A										
280	FRN0520E2■-4□	520A			FRN0590E2■-4□	520A								
315	FRN0590E2■-4□	590A												
Rating condition	Overload current rating 120% -1min, Max. ambient temp. 40°C		Overload current rating 150% -1min, Max. ambient temp. 40°C		Overload current rating 120% -1min, Max. ambient temp. 50°C		Overload current rating 150% -1min, 200% -0.5sec, Max. ambient temp. 50°C		Overload current rating 120% -1min, Max. ambient temp. 50°C		Overload current rating 150% -1min, 200% -0.5sec, Max. ambient temp. 50°C		Overload current rating 150% -1min, 200% -0.5sec, Max. ambient temp. 50°C	
Application	Fans, pumps Wire drawing		Vertical conveyance		Fans, pumps Wire drawing		Vertical conveyance Winding machines Printing machines		Fans, pumps Wire drawing		Vertical conveyance Winding machines Printing machines		Vertical conveyance Winding machines Printing machines	

Customizable Logic

Customizable logic function is available as a standard feature. FRENIC-Ace has built-in customizable logic functions with a maximum of 200 steps including both digital and analog operation functions, giving customers the ability to customize their inverters—from simple logic functions to full-scale programming. Fuji Electric also has plans to offer programming templates for wire drawing machines, hoists, spinning machines, and other applications so that the FRENIC-Ace can be used as a dedicated purpose inverter.

Example: Hoist crane application

Programming the FRENIC-Ace main unit with the required logic for controlling a hoist

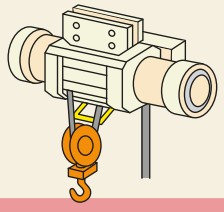

- (1) Set speed program
- (2) Reset the alarm by using the push-button switch
- (3) Mechanical limit switch function
- (4) Detect load
- (5) Automatic speed drive when no load is detected
- (6) Overload stop function

→ Dedicated/specialized functions for hoist application implemented by using customizable logic

Superior Flexibility

FRENIC-Ace has readily available interface cards and various types of fieldbus / network to maximize its flexibility.

Option Category	Option Name	Mounting adapter for option card		
		0002 to 0044 (400V), 0001 to 0069 (200V)	0059 to 0072 (400V), 0069 to 0115 (200V)	more than 0085 (400V)
Terminal block	RS-485 communications card	Unnecessary		
	PG interface (5V) card			
	PG interface (12/15V) card			
Communication *	DeviceNet communication card	The adapter is mounted on the front side of the inverter. (OPC-E2-ADP1)	The adapter is mounted inside of the inverter. (OPC-E2-ADP2)	The adapter is mounted inside of the inverter. (OPC-E2-ADP3)
	CC-Link communication card			
	PROFIBUS-DP communication card			
	EtherNet/IP communication card			
	ProfiNet-RT communication card			
	CANopen communication card			
Input / Output interface *	Digital Input / Output interface card			
	Analog Output interface interface card			

* Available by the combination use of the mounting adapter.

Wide Variety Of Functions As A Standard Feature

- Sensorless dynamic torque vector control
- Motor vector control with PG (with optional card)
- Synchronous motor with sensorless vector control
- 2-channel on-board RS485 communications port
- Standard CANopen compatibility
- Removable keypad device
- Removable control terminal block board

Multi-Function Keypad (option)

FRENIC-Ace has two different multi-function keypads available

- Multi-function keypad with LCD display: Enhanced HMI functionality
- Keypad with USB port : Connect to a computer for more efficient operation (set-up, troubleshooting, maintenance, etc)

Multi-function keypad with LCD screen

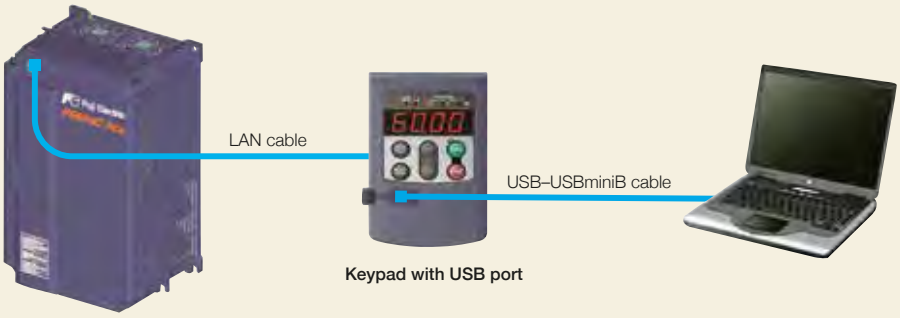

Keypad with USB port

Functional Safety

FRENIC-Ace is equipped with STO functional safety function as a standard. Therefore output circuit magnetic contactors are not required for safe stop implementation. Enhanced standard features position FRENIC-Ace ahead of its class (Safety input: 2CH, output: 1CH).

■Complies with (coming soon)

EN ISO 13849-1: 2008, Cat.3 / PL=e
IEC/EN 60204-1: 2005/2006 Stop category 0
IEC/EN 61508-1 to -7: 2010 SIL3
IEC/EN 61800-5-2: 2007 SIL3 (Safety feature: STO)
IEC/EN 62061: 2005 SIL3

10 Years Lifetime Design

FRENIC-Ace components have a design life of ten years.
A longer maintenance cycle also helps to reduce running costs.

Design life *2	Main circuit capacitor		10 years *1
	Electrolytic capacitors on PCB		10 years *1
	Cooling fan		10 years *1
	Life conditions	Ambient temperature	+40°C (104°F)
		Load rate	100% (HHD specifications) 80% (HND/HD/ND specifications)

*1 ND specifications have a rated current of two sizes higher than HHD specifications, so the life is 7 years.
*2 The designed lives are the calculated values and not the guaranteed ones.

Standards

■RoHS Directive

Standard compliance with European regulations that limit the use of specific hazardous substances.

2011/65/EU	Directive 2011/65/EU (RoHS II), issued by the European Parliament and European Council, limits the use of specific hazardous substances in electrical and electronic devices.

■Global compliances

EC Directives (CE Mark)

UL Standard (cUL Certified)

KC*

EAC certification

* Only FRN□□□E2■-○K and FRN□□□E2■-○G●

Standard Model Specifications

Three phase 400V class series

Items			Specifications										
Type			FRN□□□□E2S-4GA					FRN□□□□E2S-4E				FRN□□□□ E2S-4GB	
			0002	0004	0006	0007	0012	0022	0029	0037	0044	0059	0072
Nominal applied motor *1 [kW]		ND	0.75	1.5	2.2	3.0	5.5	11	15	18.5	22	30	37
		HD	0.75	1.1	2.2	3.0	5.5	7.5	11	15	18.5	22	30
		HND	0.75	1.1	2.2	3.0*10	5.5*10	7.5	11	15	18.5	22	30
		HHD	0.4	0.75	1.5	2.2	3.7	5.5	7.5	11	15	18.5	22
Output ratings	Rated capacity [kVA] *2	ND	1.6	3.1	4.2	5.3	9.1	16	22	28	34	45	55
		HD	1.4	2.6	3.8	4.8	8.5	13	18	24	29	34	46
		HND	1.4	2.6	3.8	4.8*10	8.5*10	13	18	24	29	34	46
		HHD	1.1	1.9	3.2	4.2	6.9	9.9	14	18	23	30	34
	Rated voltage [V] *3		Three-phase 380 to 480V (With AVR)										
	Rated current [A] *4	ND	2.1	4.1	5.5	6.9	12	21.5	28.5	37.0	44.0	59.0	72.0
		HD	1.8	3.4	5.0	6.3	11.1	17.5	23.0	31.0	38.0	45.0	60.0
		HND	1.8	3.4	5.0	6.3*10	11.1*10	17.5	23.0	31.0	38.0	45.0	60.0
		HHD	1.5	2.5	4.2	5.5	9.0	13.0	18.0	24.0	30.0	39.0	45.0
	Overload capability	ND, HND	120% of nominal current for 1min										
		HD	150% of nominal current for 1min										
		HHD	150% of nominal current for 1min or 200% of nominal current for 0.5s										
Input ratings	Main power supply		Three-phase 380 to 480V (With AVR)										
	Voltage/frequency variations		Voltage: +10 to -15% (Voltage unbalance:2% or less *8, Frequency: +5 to -5%)										
	Rated current without DCR *5 [A]	ND	2.7	4.8	7.3	11.3	16.8	33.0	43.8	52.3	60.6	77.9	94.3
		HD	2.7	3.9	7.3	11.3	16.8	23.2	33.0	43.8	52.3	60.6	77.9
		HND	2.7	3.9	7.3	11.3*10	16.8*10	23.2	33.0	43.8	52.3	60.6	77.9
		HHD	1.7	3.1	5.9	8.2	13.0	17.3	23.2	33.0	43.8	52.3	60.6
	Rated current with DCR *5 [A]	ND	1.5	2.9	4.2	5.8	10.1	21.1	28.8	35.5	42.2	57.0	68.5
		HD	1.5	2.1	4.2	5.8	10.1	14.4	21.1	28.8	35.5	42.2	57.0
		HND	1.5	2.1	4.2	5.8*10	10.1*10	14.4	21.1	28.8	35.5	42.2	57.0
		HHD	0.85	1.6	3.0	4.4	7.3	10.6	14.4	21.1	28.8	35.5	42.2
	Required power supply capacity *6 [kVA]	ND	1.1	2.1	3.0	4.1	7.0	15	20	25	29	39	47
		HD	1.1	1.5	3.0	4.1	7.0	10	15	20	25	29	39
		HND	1.1	1.5	3.0	4.1*10	7.0*10	10	15	20	25	29	39
		HHD	0.6	1.2	2.1	3.1	5.1	7.3	10	15	20	25	29
Braking	Braking torque *7 [%]	ND	53%	50%	48%	29%	27%	12%					
		HD	53%	68%	48%	29%	27%	15%					
		HND	53%	68%	48%	29%*10	27%*10	15%					
		HHD	100%		70%	40%		20%					
	DC braking		Starting frequency: 0.0 to 60.0Hz, Braking time: 0.0 to 30.0s, Braking level: 0 to 60% (ND spec.), 0 to 80% (HD/HND spec.), 0 to 100% (HHD spec.) of nominal current										
	Braking chopper		Built-in										
	Minimum connectable resistance[ohm]		200		160		130	80	60	40	34.4	16	
	Braking resistor		Option										
DC reactor (DCR)		ND	Option										
		HND, HD	Option										
		HHD	Option										
Enclosure (IEC60529)			IP20, UL open type										
Cooling method			Natural cooling		Fan cooling								
Mass [kg]			1.2	1.5	1.5	1.6	1.9	5.0	5.0	8.0	9.0	9.5	10

*1 Fuji 4-pole standard motor. At the selection of the inverter rating, consider not only the rating capacity(kW) is enough but also inverter output current is larger than selected the motor's nominal current.
*2 Rated capacity is calculated by assuming the output rated voltage as 440 V.
*3 The output voltage cannot exceed the power supply voltage.
*4 When the carrier frequency (F26) is set to below value or higher, the inverter is sure to be necessary to derate their nominal current.
HHD spec.---type 0002 to 0012 : 8kHz, type 0022 to 0168 : 10kHz,
type 0203 to 0590 : 6kHz
HND spec.---type 0002 to 0012 : 8kHz, type 0022 to 0059 : 10kHz,
type 0072 to 0168 : 6kHz, type 0203 to 0590 : 4kHz
HD,ND spec.---All type : 4kHz
The rated output current at HD/ND spec. is decreased 2% for every 1 °C (1.8 °F) when ambient temperature is +40 °C (+104 °F) or more.
*5 The value is calculated assuming that the inverter is connected with a power supply with the capacity of 500 kVA
(or 10 times the inverter capacity if the inverter capacity exceeds 50 kVA) and %X is 5%.
Be sure to use the DCR when applicable motor capacity is 75kW or above.
*6 Obtained when a DC reactor (DCR) is used.
*7 Average braking torque for the motor running alone. (It varies with the efficiency of the motor.)
*8 Voltage unbalance (%) =(Max. voltage (V) - Min. voltage (V))/Three -phase average voltage (V) × 67 (IEC 61800 - 3) If this value is 2 to 3%, use an optional AC reactor (ACR).
*10 HND spec. of the type 0007 and 0012: allowable ambient temperature 40 °C (+104 °F) or less.
The rated output current at HND spec. is decreased 1% for every 1 °C (1.8 °F) when ambient temperature is +40 °C (+104 °F) or more.

Standard Model Specifications

Three phase 400V class series

Items			Specifications										
Type			FRN□□□□E2S-4GB										
			0085	0105	0139	0168	0203	0240	0290	0361	0415	0520	0590
Nominal applied motor *1 [kW]		ND	45	55	75	90	110	132	160	200	220	280	315
		HD	37	45	55	75	90	110	132	160	200	220	250
		HND	37	45	55	75	90	110	132	160	200	220	280
		HHD	30	37	45	55	75	90	110	132	160	200	220
Output ratings	Rated capacity [kVA] *2	ND	65	80	106	128	155	183	221	275	316	396	450
		HD	57	69	85	114	134	160	193	232	287	316	364
		HND	57	69	85	114	134	160	193	232	287	316	396
		HHD	46	57	69	85	114	134	160	193	232	287	316
	Rated voltage [V] *3		Three-phase 380 to 480V (With AVR)										
	Rated current [A] *4	ND	85.0	105	139	168	203	240	290	361	415	520	590
		HD	75.0	91.0	112	150	176	210	253	304	377	415	477
		HND	75.0	91.0	112	150	176	210	253	304	377	415	520
		HHD	60.0	75.0	91.0	112	150	176	210	253	304	377	415
	Overload capability	ND, HND	120% of nominal current for 1min										
		HD	150% of nominal current for 1min										
		HHD	150% of nominal current for 1min or 200% of nominal current for 0.5s										
Input ratings	Main power supply		Three-phase 380 to 480V, 50/60Hz				Three-phase 380 to 440V, 50Hz *9 Three-phase 380 to 480V, 60Hz						
	Voltage/frequency variations		Voltage: +10 to -15% (Voltage unbalance:2% or less *8, Frequency: +5 to -5%) *8										
	Rated current without DCR *5 [A]	ND	114	140	-	-	-	-	-	-	-	-	-
		HD	94.3	114	140	-	-	-	-	-	-	-	-
		HND	94.3	114	140	-	-	-	-	-	-	-	-
		HHD	77.9	94.3	114	140	-	-	-	-	-	-	-
	Rated current with DCR *5 [A]	ND	83.2	102	138	164	201	238	286	357	390	500	559
		HD	68.5	83.2	102	138	164	201	238	286	357	390	443
		HND	68.5	83.2	102	138	164	201	238	286	357	390	500
		HHD	57.0	68.5	83.2	102	138	164	201	238	286	357	390
	Required power supply capacity *6 [kVA]	ND	58	71	96	114	139	165	199	248	271	347	388
		HD	47	58	71	96	114	140	165	199	248	271	307
		HND	47	58	71	96	114	140	165	199	248	271	347
		HHD	39	47	58	71	96	114	140	165	199	248	271
Braking	Braking torque *7 [%]	ND	5 to 9%										
		HD	7 to 12%										
		HND	7 to 12%										
		HHD	10 to 15%										
	DC braking		Starting frequency: 0.0 to 60.0Hz, Braking time: 0.0 to 30.0s, Braking level: 0 to 60% (ND spec.), 0 to 80% (HD/HND spec.), 0 to 100% (HHD spec.) of nominal current										
	Braking chopper		Option										
	Minimum connection resistance[ohm]		-	-	-	-	-	-	-	-	-	-	-
	Braking resistor		Option										
DC reactor (DCR)		ND	Option										
		HND, HD	Option										
		HHD	Option										
Enclosure (IEC60529)			IP00, UL open type										
Cooling method			Fan cooling										
Mass [kg]			25	26	30	33	40	62	63	95	96	130	140

*1 Fuji 4-pole standard motor. At the selection of the inverter rating, consider not only the rating capacity(kW) is enough but also inverter output current is larger than selected the motor's nominal current.
*2 Rated capacity is calculated by assuming the output rated voltage as 440 V.
*3 Output voltage cannot exceed the power supply voltage.
*4 When the carrier frequency (F26) is set to below value or higher, the inverter is sure to be necessary to derate their nominal current.
HHD spec.---type 0002 to 0012 : 8kHz, type 0022 to 0168 : 10kHz, type 0203 to 0590 : 6kHz
HND spec.---type 0002 to 0012 : 8kHz, type 0022 to 0059 : 10kHz, type 0072 to 0168 : 6kHz, type 0203 to 0590 : 4kHz
HD,ND spec.---All type : 4kHz
The rated output current at HD/ND spec. is decreased 2% for every 1 °C (1.8 °F) when ambient temperature is +40 °C (+104 °F) or more.
*5 The value is calculated assuming that the inverter is connected with a power supply with the capacity of 500 kVA (or 10 times the inverter capacity if the inverter capacity exceeds 50 kVA) and %X is 5%. Be sure to use the DCR when applicable motor capacity is 75kW or above.
*6 Obtained when a DC reactor (DCR) is used.
*7 Average braking torque for the motor running alone. (It varies with the efficiency of the motor.)
*8 Voltage unbalance (%) =(Max. voltage (V) - Min. voltage (V))/Three -phase average voltage (V) × 67 (IEC 61800 - 3) If this value is 2 to 3%, use an optional AC reactor (ACR).
*9 The 400 V class series with type 0203 or above is equipped with a set of switching connectors (male) which should be configured according to the power source voltage and frequency.

Standard Model Specifications

Three phase 200V class series

Items			Specifications												
Type			FRN□□□□E2S-2GA							FRN□□□□E2S-2GB					
			0001	0002	0004	0006	0010	0012	0020	0030	0040	0056	0069	0088	0115
Nominal applied motor *1 [kW]		HND	0.2	0.4	0.75	1.1	2.2	3.0*10	5.5*10	7.5	11	15	18.5	22	30
		HHD	0.1	0.2	0.4	0.75	1.5	2.2	3.7	5.5	7.5	11	15	18.5	22
Output ratings	Rated capacity [kVA] *2	HND	0.5	0.8	1.3	2.3	3.7	4.6*10	7.5*10	11	15	21	26	34	44
		HHD	0.3	0.6	1.1	1.9	3.0	4.2	6.7	9.5	13	18	23	29	34
	Rated voltage [V] *3		Three-phase 200 to 240V (With AVR)												
	Rated current [A] *4	HND	1.3	2.0	3.5	6.0	9.6	12*10	19.6*10	30	40	56	69	88	115
		HHD	0.8	1.6	3.0	5.0	8.0	11	17.5	25	33	47	60	76	90
	Overload capability	HND	120% of nominal current for 1min												
		HHD	150% of nominal current for 1min or 200% of nominal current for 0.5s												
Input ratings	Main power supply		Three-phase 200 to 240V, 50/60Hz												
	Voltage/frequency variations		Voltage: +10 to -15% (Voltage unbalance:2% or less *8, Frequency: +5 to -5%)												
	Rated current without DCR *5 [A]	HND	1.8	2.6	4.9	6.7	12.8	17.9*10	31.9*10	42.7	60.7	80.0	97.0	112	151
		HHD	1.1	1.8	3.1	5.3	9.5	13.2	22.2	31.5	42.7	60.7	80.0	97.0	112
	Rated current with DCR *5 [A]	HND	0.93	1.6	3.0	4.3	8.3	11.7*10	19.9*10	28.8	42.2	57.6	71.0	84.4	114
		HHD	0.57	0.93	1.6	3.0	5.7	8.3	14.0	21.1	28.8	42.2	57.6	71.0	84.4
	Required power supply capacity *6 [kVA]	HND	0.4	0.6	1.1	1.5	2.9	4.1*10	6.9*10	10	15	20	25	30	40
		HHD	0.2	0.4	0.6	1.1	2.0	2.9	4.9	7.3	10	15	20	25	30
Braking	Braking torque *7 [%]	HND	75%		53%	68%	48%	29%*10	27%*10	15%					
		HHD	150%		100%		70%	40%		20%					
	DC braking		Starting frequency: 0.0 to 60.0Hz, Braking time: 0.0 to 30.0s, Braking level: 0 to 60% (ND spec.), 0 to 80% (HD/HND spec.), 0 to 100% (HHD spec.) of nominal current												
	Braking chopper		Built-in												
	Minimum connection resistance[ohm]		100				40		33	20	15	10	8.6	4	
	Braking resistor		Option												
DC reactor (DCR)		HND	Option												
		HHD	Option												
Enclosure (IEC60529)			IP20, UL open type												
Cooling method			Naturalural cooling				Fan cooling								
Mass [kg]			0.5	0.5	0.6	0.8	1.5	1.5	1.8	5.0	5.0	8.0	9.0	9.5	10

*1 Fuji 4-pole standard motor. At the selection of the inverter rating, consider not only the rating capacity(kW) is enough but also inverter output current is larger than selected the motor's nominal current.
*2 Rated capacity is calculated by assuming the output rated voltage as 220 V.
*3 Output voltage cannot exceed the power supply voltage.
*4 When the carrier frequency (F26) is set to below value or higher, the inverter is sure to be necessary to derate their nominal current.
HHD spec.---type 0001 to 0020 : 8kHz, type 0030 to 0115 : 10kHz,
HND spec.---type 0001 to 0020 : 4kHz, type 0030 to 0069 : 10kHz, type 0088,0115 : 4kHz
*5 The value is calculated assuming that the inverter is connected with a power supply with the capacity of 500 kVA (or 10 times the inverter capacity if the inverter capacity exceeds 50 kVA) and %X is 5%.
*6 Obtained when a DC reactor (DCR) is used.
*7 Average braking torque for the motor running alone. (It varies with the efficiency of the motor.)
*8 Voltage unbalance (%) =(Max. voltage (V) - Min. voltage (V))/Three -phase average voltage (V) × 67 (IEC 61800 - 3)
If this value is 2 to 3%, use an optional AC reactor (ACR).
*10 HND spec. of the type 0012 and 0020: allowable ambient temperature 40 °C (+104 °F) or less.
The rated output current at HND spec. is decreased 1% for every 1 °C (1.8 °F) when ambient temperature is +40 °C (+104 °F) or more.

Standard Model Specifications

Single phase 200V class series (Basic Type)

Items			Specifications					
Type			FRN□□□□E2S-7GA					
			0001	0002	0003	0005	0008	0011
Nominal applied motor *1 [kW]		HHD	0.1	0.2	0.4	0.75	1.5	2.2
Output ratings	Rated capacity [kVA] *2	HHD	0.3	0.6	1.1	1.9	3.0	4.2
	Rated voltage [V] *3		Three-phase 200 to 240V (With AVR)					
	Rated current [A] *4	HHD	0.8	1.6	3.0	5.0	8.0	11
	Overload capability	HHD	150% of nominal current for 1min or 200% of nominal current for 0.5s					
Input ratings	Main power supply		Three-phase 200 to 240V, 50/60Hz					
	Voltage/frequency variations		Voltage: +10 to -15% (Voltage unbalance:2% or less *8, Frequency: +5 to -5%)					
	Rated current without DCR *5 [A]	HHD	1.8	3.3	5.4	9.7	16.4	24.8
	Rated current with DCR *5 [A]	HHD	1.1	2.0	3.5	6.4	11.6	17.5
	Required power supply capacity *6 [kVA]	HHD	0.3	0.4	0.7	1.3	2.4	3.5
Braking	Braking torque *7 [%]	HHD	150%		100%		70%	40%
	DC braking		Starting frequency: 0.0 to 60.0Hz, Braking time: 0.0 to 30.0s, Braking level: 0 to 100% (HHD spec.) of nominal current					
	Braking chopper		Built-in					
	Minimum connection resistance [ohm]		100				40	
	Braking resistor		Option					
DC reactor (DCR)		HHD	Option					
Enclosure (IEC60529)			IP20, UL open type					
Cooling method			Naturalural cooling				Fan cooling	
Mass [kg]			0.5	0.5	0.6	0.9	1.6	1.8

*1 Fuji 4-pole standard motor. At the selection of the inverter rating, consider not only the rating capacity(kW) is enough but also inverter output current is larger than selected the motor's nominal current.
*2 Rated capacity is calculated by assuming the output rated voltage as 220 V.
*3 Output voltage cannot exceed the power supply voltage.
*4 When the carrier frequency (F26) is set to below value or higher, the inverter is sure to be necessary to derate their nominal current.
HHD spec.---type 0001 to 0011 : 8kHz
*5 The value is calculated assuming that the inverter is connected with a power supply with the capacity of 500 kVA (or 10 times the inverter capacity if the inverter capacity exceeds 50 kVA) and %X is 5%.
*6 Obtained when a DC reactor (DCR) is used.
*7 Average braking torque for the motor running alone. (It varies with the efficiency of the motor.)

EMC Filter Built-in Type Specifications

Three phase 400V class series

Items			Specifications										
Type			FRN□□□□E2E-4GA					FRN□□□□E2E-4E					
			0002	0004	0006	0007	0012	0022	0029	0037	0044	0059	0072
Nominal applied motor *1 [kW]		ND	0.75	1.5	2.2	3.0	5.5	11	15	18.5	22	30	37
		HD	0.75	1.1	2.2	3.0	5.5	7.5	11	15	18.5	22	30
		HND	0.75	1.1	2.2	3.0*9	5.5*9	7.5	11	15	18.5	22	30
		HHD	0.4	0.75	1.5	2.2	3.7	5.5	7.5	11	15	18.5	22
Output ratings	Rated capacity [kVA] *2	ND	1.6	3.1	4.2	5.3	9.1	16	22	28	34	45	55
		HD	1.4	2.6	3.8	4.8	8.5	13	18	24	29	34	46
		HND	1.4	2.6	3.8	4.8*9	8.5*9	13	18	24	29	34	46
		HHD	1.1	1.9	3.2	4.2	6.9	9.9	14	18	23	30	34
	Rated voltage [V] *3		Three-phase 380 to 480V (With AVR)										
	Rated current [A] *4	ND	2.1	4.1	5.5	6.9	12	21.5	28.5	37.0	44.0	59.0	72.0
		HD	1.8	3.4	5.0	6.3	11.1	17.5	23.0	31.0	38.0	45.0	60.0
		HND	1.8	3.4	5.0	6.3*9	11.1*9	17.5	23.0	31.0	38.0	45.0	60.0
		HHD	1.5	2.5	4.2	5.5	9.0	13.0	18.0	24.0	30.0	39.0	45.0
	Overload capability	ND, HND	120% of nominal current for 1min										
		HD	150% of nominal current for 1min										
		HHD	150% of nominal current for 1min or 200% of nominal current for 0.5s										
Input ratings	Main power supply		Three-phase 380 to 480V, 50/60Hz										
	Voltage/frequency variations		Voltage: +10 to -15% (Voltage unbalance:2% or less *8, Frequency: +5 to -5%)										
	Rated current without DCR *5 [A]	ND	2.7	4.8	7.3	11.3	16.8	33.0	43.8	52.3	60.6	77.9	94.3
		HD	2.7	3.9	7.3	11.3	16.8	23.2	33.0	43.8	52.3	60.6	77.9
		HND	2.7	3.9	7.3	11.3*9	16.8*9	23.2	33.0	43.8	52.3	60.6	77.9
		HHD	1.7	3.1	5.9	8.2	13.0	17.3	23.2	33.0	43.8	52.3	60.6
	Rated current with DCR *5 [A]	ND	1.5	2.1	4.2	5.8	10.1	21.1	28.8	35.5	42.2	57.0	68.5
		HD	1.5	2.1	4.2	5.8	10.1	14.4	21.1	28.8	35.5	42.2	57.0
		HND	1.5	2.1	4.2	5.8*9	10.1*9	14.4	21.1	28.8	35.5	42.2	57.0
		HHD	0.85	1.6	3.0	4.4	7.3	10.6	14.4	21.1	28.8	35.5	42.2
	Required power supply capacity *6 [kVA]	ND	1.1	1.5	3.0	4.1	7.0	15	20	25	29	39	47
		HD	1.1	1.5	3.0	4.1	7.0	10	15	20	25	29	39
		HND	1.1	1.5	3.0	4.1*9	7.0*9	10	15	20	25	29	39
		HHD	0.6	1.2	2.1	3.1	5.1	7.3	10	15	20	25	29
Braking	Braking torque *7 [%]	ND	53%	50%	48%	29%	27%	12%					
		HD	53%	68%	48%	29%	27%	15%					
		HND	53%	68%	48%	29%*9	27%*9	15%					
		HHD	100%		70%	40%		20%					
	DC braking		Starting frequency: 0.0 to 60.0Hz, Braking time: 0.0 to 30.0s, Braking level: 0 to 60% (ND spec.), 0 to 80% (HD/HND spec.), 0 to 100% (HHD spec.) of nominal current										
	Braking chopper		Built-in										
	Minimum connection resistance [ohm]		200		160		130	80	60	40	34.4	16	
	Braking resistor		Option										
EMC filter			Compliant with EMC Directives, Emission: Category C2. Immunity: Category C3 (2nd Env.) (EN61800-3: 2004)(Pending)					Compliant with EMC Directives, Emission: Category C3. Immunity: Category C3(2nd Env.)(EN61800-3:2004)					
DC reactor (DCR)		ND	Option										
		HND, HD	Option										
		HHD	Option										
Enclosure (IEC60529)			IP20, UL open type										
Cooling method			Natural cooling		Fan cooling								
Mass [kg]			1.5	1.8	2.3	2.3	2.4	6.5	6.5	11.2	11.2	10.5	11.2

*1 Fuji 4-pole standard motor. At the selection of the inverter rating, consider not only the rating capacity(kW) is enough but also inverter output current is larger than selected the motor's nominal current.
*2 Rated capacity is calculated by assuming the output rated voltage as 440 V.
*3 Output voltage cannot exceed the power supply voltage.
*4 When the carrier frequency (F26) is set to below value or higher, the inverter is sure to be necessary to derate their nominal current.
HHD spec.---type 0002 to 0012 : 8kHz, type 0022 to 0168 : 10kHz, type 0203 to 0590 : 6kHz
HND spec.---type 0002 to 0006 : 8kHz, type 0007 to 0012 : 4kHz, type 0022 to 0168 : 6kHz, type 0203 to 0590 : 4kHz
HD,ND spec.---All type : 4kHz
*5 The value is calculated assuming that the inverter is connected with a power supply with the capacity of 500 kVA (or 10 times the inverter capacity if the inverter capacity exceeds 50 kVA) and %X is 5%.Be sure to use the DCR when applicable motor capacity is 75kW or above.
*6 Obtained when a DC reactor (DCR) is used.
*7 Average braking torque for the motor running alone. (It varies with the efficiency of the motor.)
*8 Voltage unbalance (%) =(Max. voltage (V) - Min. voltage (V))/Three -phase average voltage (V) × 67 (IEC 61800 - 3)
If this value is 2 to 3%, use an optional AC reactor (ACR).
*9 HND spec. of the type 0007 and 0012: allowable ambient temperature 40°C (+104 °F) or less. The rated output current at HND spec. is decreased 1% for every 1 °C (1.8 °F) when ambient temperature is +40 °C (+104 °F) or more.

EMC Filter Built-in Type Specifications

Three phase 400V class series

Items			Specifications										
Type			FRN□□□□E2E-4E										
			0085	0105	0139	0168	0203	0240	0290	0361	0415	0520	0590
Nominal applied motor *1 [kW]		ND	45	55	75	90	110	132	160	200	220	280	315
		HD	37	45	55	75	90	110	132	160	200	220	250
		HND	37	45	55	75	90	110	132	160	200	220	280
		HHD	30	37	45	55	75	90	110	132	160	200	220
Output ratings	Rated capacity [kVA] *2	ND	65	80	106	128	155	183	221	275	316	396	450
		HD	57	69	85	114	134	160	193	232	287	316	364
		HND	57	69	85	114	134	160	193	232	287	316	396
		HHD	46	57	69	85	114	134	160	193	232	287	316
	Rated voltage [V] *3		Three-phase 380 to 480V (With AVR)										
	Rated current [A] *4	ND	85.0	105	139	168	203	240	290	361	415	520	590
		HD	75.0	91.0	112	150	176	210	253	304	377	415	477
		HND	75.0	91.0	112	150	176	210	253	304	377	415	520
		HHD	60.0	75.0	91.0	112	150	176	210	253	304	377	415
	Overload capability	ND, HND	120% of nominal current for 1min										
		HD	150% of nominal current for 1min										
		HHD	150% of nominal current for 1min or 200% of nominal current for 0.5s										
Input ratings	Main power supply		Three-phase 380 to 480V, 50/60Hz				Three-phase 380 to 440V, 50Hz Three-phase 380 to 480V, 60Hz*9						
	Voltage/frequency variations		Voltage: +10 to -15% (Voltage unbalance:2% or less *8, Frequency: +5 to -5%)										
	Rated current without DCR *5 [A]	ND	114	140	-	-	-	-	-	-	-	-	-
		HD	94.3	114	140	-	-	-	-	-	-	-	-
		HND	94.3	114	140	-	-	-	-	-	-	-	-
		HHD	77.9	94.3	114	140	-	-	-	-	-	-	-
	Rated current with DCR *5 [A]	ND	83.2	102	138	164	201	238	286	357	390	500	559
		HD	68.5	83.2	102	138	164	201	238	286	357	390	443
		HND	68.5	83.2	102	138	164	201	238	286	357	390	500
		HHD	57.0	68.5	83.2	102	138	164	201	238	286	357	390
	Required power supply capacity *6 [kVA]	ND	58	71	96	114	139	165	199	248	271	347	388
		HD	47	58	71	96	114	140	165	199	248	271	307
		HND	47	58	71	96	114	140	165	199	248	271	347
		HHD	39	47	58	71	96	114	140	165	199	248	271
Braking	Braking torque *7 [%]	ND	5 to 9%										
		HD	7 to 12%										
		HND	7 to 12%										
		HHD	10 to 15%										
	DC braking		Starting frequency: 0.0 to 60.0Hz, Braking time: 0.0 to 30.0s, Braking level: 0 to 60% (ND spec.), 0 to 80% (HD/HND spec.), 0 to 100% (HHD spec.) of nominal current										
	Braking chopper		Option										
	Minimum connection resistance[ohm]		-	-	-	-	-	-	-	-	-	-	-
	Braking resistor		Option										
EMC filter *10			Compliant with EMC Directives, Emission and Immunity: Category C3 (2nd Env.) (EN61800-3:2004)										
DC reactor (DCR)		ND	Option										
		HND, HD	Option										
		HHD	Option										
Enclosure (IEC60529)			IP00, UL open type										
Cooling method			Fan cooling										
Mass [kg]			26	27	31	33	40	62	63	95	96	130	140

*1 Fuji 4-pole standard motor. At the selection of the inverter rating, consider not only the rating capacity(kW) is enough but also inverter output current is larger than selected the motor's nominal current.
*2 Rated capacity is calculated by assuming the output rated voltage as 440 V.
*3 Output voltage cannot exceed the power supply voltage.
*4 When the carrier frequency (F26) is set to below value or higher, the inverter is sure to be necessary to derate their nominal current.
HHD spec.---type 0002 to 0012 : 8kHz, type 0022 to 0168 : 10kHz, type 0203 to 0590 : 6kHz
HND spec.---type 0002 to 0012 : 8kHz, type 0022 to 0059 : 10kHz, type 0072 to 0168 : 6kHz, type 0203 to 0590 : 4kHz
HD,ND spec.---All type : 4kHz
The rated output current at HD/ND spec. is decreased 2% for every 1 °C (1.8 °F) when ambient temperature is +40 °C (+104 °F) or more.
*5 The value is calculated assuming that the inverter is connected with a power supply with the capacity of 500 kVA (or 10 times the inverter capacity if the inverter capacity exceeds 50 kVA) and %X is 5%. Be sure to use the DCR when applicable motor capacity is 75kW or above.
*6 Obtained when a DC reactor (DCR) is used.
*7 Average braking torque for the motor running alone. (It varies with the efficiency of the motor.)
*8 Voltage unbalance (%) =(Max. voltage (V) - Min. voltage (V))/Three -phase average voltage (V) × 67 (IEC 61800 - 3) If this value is 2 to 3%, use an optional AC reactor (ACR).
*9 HND spec. of the type 0007 and 0012: allowable ambient temperature 40°C (+104 °F) or less. The rated output current at HND spec. is decreased 1% for every 1 °C (1.8 °F) when ambient temperature is +40 °C (+104 °F) or more.

EMC Filter Built-in Type Specifications

Single phase 200V class series

Items			Specifications					
Type			FRN□□□□E2E-7GA					
			0001	0002	0003	0005	0008	0011
Nominal applied motor *1 [kW]		HHD	0.1	0.2	0.4	0.75	1.5	2.2
Output ratings	Rated capacity [kVA] *2	HHD	0.3	0.6	1.1	1.9	3.0	4.2
	Rated voltage [V] *3		Three-phase 200 to 240V (With AVR)					
	Rated current [A] *4	HHD	0.8	1.6	3.0	5.0	8.0	11
	Overload capability	HHD	150% of nominal current for 1min or 200% of nominal current for 0.5s					
Input ratings	Main power supply		Single-phase 200 to 240V, 50/60Hz					
	Voltage/frequency variations		Voltage: +10 to -10% Frequency: +5 to -5%					
	Rated current without DCR *5 [A]	HHD	1.8	3.3	5.4	9.7	16.4	24.8
	Rated current with DCR *5 [A]	HHD	1.1	2.0	3.5	6.4	11.6	17.5
	Required power supply capacity *6 [kVA]	HHD	0.3	0.4	0.7	1.3	2.4	3.5
Braking	Braking torque *7 [%]	HHD	150%		100%		70%	40%
	DC braking		Starting frequency: 0.0 to 60.0Hz, Braking time: 0.0 to 30.0s, Braking level: 0 to 100% (HHD spec.) of nominal current					
	Braking chopper		Built-in					
	Minimum connectable resistance [ohm]		100				40	
	Braking resistor		Option					
EMC filter			Compliant with EMC Directives, Emission: Category C2. Immunity: Category C3 (2nd Env.) (EN61800-3:2004)					
DC reactor (DCR)		HHD	Option					
Enclosure (IEC60529)			IP20, UL open type					
Cooling method			Naturalural cool				Fan cooling	
Mass [kg]			0.6	0.6	0.7	1.1	2.3	2.3

*1 Fuji 4-pole standard motor. At the selection of the inverter rating, consider not only the rating capacity (kW) is enough but also inverter output current is larger than selected the motor's nominal current.
*2 Rated capacity is calculated by assuming the output rated voltage as 220 V.
*3 Output voltage cannot exceed the power supply voltage.
*4 When the carrier frequency (F26) is set to below value or higher, the inverter is sure to be necessary to derate their nominal current.
HHD spec.---type 0001 to 0011 ：8kHz
*5 The value is calculated assuming that the inverter is connected with a power supply with the capacity of 500 kVA (or 10 times the inverter capacity if the inverter capacity exceeds 50 kVA) and %X is 5%.
*6 Obtained when a DC reactor (DCR) is used.
*7 Average braking torque for the motor running alone. (It varies with the efficiency of the motor.)

Common Specifications

	Items	Specifications	Remarks
Output	Maximum frequency	- HHD/HND/HD spec.: 25 to 500 Hz variable (V/f control mode, Magnetic pole position sensorless vector control mode) (Up to 200 Hz under vector control with speed sensor) - ND spec.: 25 to 120 Hz variable (all control mode)	IMPG-VC
	Base frequency	25 to 500 Hz variable (in conjunction with the maximum frequency)	
	Starting frequency	0.1 to 60.0 Hz variable (0.0 Hz under vector control with speed sensor)	IMPG-VC
	Carrier frequency	Three phase 400V class - Type 0002 to 0059: - 0.75 to 16kHz variable (HHD/HND/HD spec.) - 0.75 to 10kHz variable (ND spec.) - Type 0072 to 0168: - 0.75 to 16kHz variable (HHD spec.) - 0.75 to 10kHz variable (HND/HD spec.) - 0.75 to 6kHz variable (ND spec.) - Type 0203 or above type of capacity: - 0.75 to 10kHz variable (HHD spec.) - 0.75 to 6kHz variable (HND/HD/ND spec.) Three phase 200V class - Type 0030,0040,0056,0069 - 0.75 to 16kHz variable (HHD/HND/ spec.) - Type 0012 and 0020: - 0.75 to 16kHz variable (HHD spec.) - 0.75 to 10kHz variable (ND spec.) - Type 0115: - 0.75 to 16kHz variable (HHD spec.) - 0.75 to 10kHz variable (HND spec.) Single phase 200V class - Type 0001 to 0011 - 0.75 to 16kHz variable (HHD spec.) Note: Carrier frequency drops automatically to protect the inverter depending on environmental temperature and output current. (This auto drop function can be canceled.)	
	Output frequency accuracy (Stability)	- Analog setting: ±0.2% of maximum frequency 25±10°C (77±18°F)	
		- Keypad setting: ±0.01% of maximum frequency -10 to +50°C (14 to 122°F)	
	Frequency setting resolution	- Analog setting: 0.05% of maximum frequency	
		- Keypad setting: 0.01 Hz (99.99 Hz or less), 0.1 Hz (100.0 to 500.0 Hz)	
		- Link setting: 0.005% of maximum frequency or 0.01 Hz (fixed)	
	Speed control range	- 1 : 1500 (Minimum speed : Nominal speed, 4-pole, 1 to 1500 rpm)	IMPG-VC
		- 1 : 100 (Minimum speed : Nominal speed, 4-pole, 15 to 1500 rpm)	IMPG-VF
		- 1 : 10 (Minimum speed : Nominal speed, 6-pole, 180 to 1800 rpm)	PM-SVC
	Speed control accuracy	- Analog setting: ±0.2% of maximum frequency or below 25 ±10°C (77±18°F)	IMPG-VC
		- Digital setting: ±0.01% of maximum frequency or below -10 to +50°C (14 to 122°F)	
		- Analog setting: ±0.5% of base frequency or below 25 ±10°C (77±18°F)	PM-SVC
		- Digital setting: ±0.5% of base frequency or below -10 to +50°C (14 to 122°F)	
Control	Control method	- V/f control	VF
		- Speed sensor less vector control (Dynamic torque vector control)	IM-SVC(DTV)
		- V/f control with slip compensation active	VF with SC
		- V/f control with speed sensor (The PG option card is required.)	IMPG-VF
		- V/f Control with speed sensor (+Auto Torque Boost) (The PG option card is required.)	IMPG-ATB
		- Vector control with speed sensor (The PG option card is required.)	IMPG-VC
		- Vector control without magnetic pole position sensor	PM-SVC
	Voltage/Frequency characteristic	- Possible to set output voltage at base frequency and at maximum output frequency (80 to 240 V). - Possible to set output voltage at base frequency and at maximum output frequency (160 to 500 V).	
		- Non-linear V/f setting (3 points): Free voltage (0 to 500 V) and frequency (0 to 500 Hz) can be set. - Non-linear V/f setting (3 points): Free voltage (0 to 240 V) and frequency (0 to 500 Hz) can be set.	
	Torque boost	- Auto torque boost (For constant torque load) - Manual torque boost: Torque boost value can be set between 0.0 and 20.0%. - Select application load with the function code. (Variable torque load or constant torque load)	
	Starting torque	Three phase 400V class - 200% or above (HHD spec.:type 0072 or below) / 150% or higher (HHD spec.:type 0085 or above) at reference frequency 0.5Hz - 120% or higher at reference frequency 0.5Hz, (HND/ND spec.) - 150% or higher at reference frequency 0.5Hz, (HD spec.) (Base frequency 50 Hz, with activating the slip compensation and the auto torque boost mode, applied motor is Fuji 4-pole standard motor.) Three phase 200V class and single phase 200V class - 200% or above (HHD spec.:type 0069 or below) at reference frequency 0.5Hz - 120% or higher at reference frequency 0.5Hz, (HND spec.) (Base frequency 50 Hz, with activating the slip compensation and the auto torque boost mode, applied motor is Fuji 4-pole standard motor.)	

Common Specifications

	Items	Specifications	Remarks
Control	Start/Stop operation	- Keypad: Start and stop with RUN and STOP keys (Standard keypad) Start and stop with FWD / REV and STOP keys (Option multi-functional keypad)	
		- External signals (digital inputs): Forward (Reverse) rotation, stop command (capable of 3-wire operation), coast-to-stop command, external alarm, alarm reset, etc.	
		- Link operation: Operation via built-in RS-485 or field bus (option) communications	
		- Switching operation command: Remote/local switching, link switching	
	Frequency setting	- Keypad: Settable with ∧ and ∨ keys	Analog input between DC+1 to +5V is available with analog bias/gain function for input.
		- External volume: Available to be set with external frequency command potentiometer. (1 to 5 kΩ 1/2 W)	
		- Analog input: 0 to ±10 V DC (±5 V DC)/ 0 to ±100% (terminal [12]) 0 to +10 V DC (+5 V DC)/ 0 to +100% (terminal [12]) +4 to +20 mA DC/ 0 to 100% (terminal [C1]) +4 to +20 mA DC/ -100 to 0 to 100% (terminal [C1]) 0 to +20 mA DC/ 0 to 100% (terminal [C1]) 0 to +20 mA DC/ -100 to 0 to 100% (terminal [C1]) 0 to +10 V DC (+5 V DC)/ 0 to +100% (terminal [V2]) 0 to +10 V DC (+5 V DC)/ -100 to 0 to +100% (terminal [V2])	
		- UP/DOWN operation: Frequency can be increased or decreased while the digital input signal is ON.	
		- Multi-step frequency: Selectable from 16 different frequencies (step 0 to 15)	
		- Pattern Operation Mode: Automatically run in accordance with the previously configured running time,rotation direction, acceleration/deceleration and reference frequency. Maximum allowable settings are 7 stages.	
		- Link operation: Can be specified via built-in RS-485 or built-in CANOpen communicatons. (Standard) Can be specified via bus communicatons. (Option)	
		- Switching frequency setting source: Two of frequency settings source can be switched with an external signal(digital input). Remote/local switching, Link switching	
		- Auxiliary frequency setting: Inputs at terminals [12], [C1] or [V2] can be added to the main setting as auxiliary frequency settings.	
		- Operation at a specified ratio: The ratio can be set by analog input signal. DC0-10V/0(4)-20mA /0-200%(variable)	
		Inverse operation : Switchable from "0 to +10 VDC/0 to 100%" to "+10 to 0 VDC/0 to 100%" by external command. (terminals [12]/[V2]) : Switchable from "0 to -10 VDC/0 to -100%" to "-10 to 0 VDC/0 to -100%" by external command.(terminal [12]) : Switchable from "4 to +20 mA DC/0 to 100%" to "+20 to 4 mA DC/0 to 100%" by external command.(terminal [C1]) : Switchable from "0 to +20 mA DC/0 to 100%" to "+20 to 4 mA DC/0 to 100%" by external command.(terminal [C1])	
		- Pulse train input (standard): Pulse input = Terminal [X5], Rotational direction = Another input terminal except [X5]. Complementary output: Max. 100 kHz, Open collector output: Max. 30 kHz	
		- Pulse train input (option):The PG option card is required. CW/CCW pulse, pulse + rotational direction Complementary output: Max. 100 kHz, Open collector output: Max. 30 kHz	
	Acceleration/ Deceleration time	- Setting range: From 0.00 to 6000 s - Switching: The four types of acceleration/deceleration time can be set or selected individually (switchable during operation). - Acceleration/deceleration pattern: Linear acceleration/deceleration, S-shape acceleration/deceleration (weak, free (set by function codes)), curvilinear acceleration/deceleration - Deceleration mode (coast-to-stop):Shut-off of the run command makes the motor coast to a stop. - ACC./DEC. time for "Jogging operation" can be set. (0.00 to 6000s) - Deceleration time for forcible stop: Deceleration stop by the forcible stop (STOP). S-curve will be canceled during "Force to Stop".	
	Frequency limiter (Upper limit and lower limit frequencies)	- Specifies the upper and lower limits in Hz. - Selectable for the operation performed when the reference frequency drops below the lower limit specified by related function code.	
	Bias for frequency/ PID command	- Bias of set frequency and PID command can be independently set(setting range: 0 to ±100%).	
	Analog input	- Gain : Set in the range from 0 to 200% - Off-set : Set in the range from -5.0 to +5.0% - Filter : Set in the range from 0.00s to 5.00 s - Polarity : Select from ± or +	
	Jump frequency	- Three operation points and their common jump width (0.0 to 30.0 Hz) can be set.	
	Timer operation	- Operate and stop by the time set with keypad. (1 cycle operation)	
	Jogging operation	- Operation with RUN key (standard keypad), FWD or REV key (multi-functional keypad), or digital contact input FWD or REV.(Exclusive acceleration/deceleration time setting, exclusive frequency setting)	

Common Specifications

	Items	Specifications	Remarks
Control	Auto-restart after momentary power failure		
	(Trip at power failure)	The inverter trips immediately after power failure.	
	(Trip at power recovery)	Coast-to-stop at power failure and trip at power recovery	
	(Deceleration stop)	Deceleration stop at power failure, and trip after stoppage	
	(Continue to run)	Operation is continued using the load inertia energy.	
	(Start at the frequency selected before momentary power failure)	Coast-to-stop at power failure and start after power recovery at the frequency selected before momentary stop.	
	(Start at starting frequency)	Coast-to-stop at power failure and start at the starting frequency after power recovery.	
	(Start at the searched frequency)	Coast-to-stop at power failure and start at the serched frequency after power recovery.	
	Hardware current limiter	- Limits the current by hardware to prevent an overcurrent trip caused by fast load variation or momentary power failure, which cannot be covered by the software current limiter. This limiter can be canceled.	
	Software current limiter	- Automatically reduces the frequency so that the output current becomes lower than the preset operation level.	
	Operation by commercial power supply	- With commercial power selection command, the inverter outputs 50/60 Hz (SW50,SW60).	
	Slip compensation	- Compensates the motor slip in order to keep their speed at the reference one regardless of their load torque. - Adjustable compensation time constant is possible.	
	Droop control	- In a machine driven with multi-motor system, this function adjusts the speed of each motor individually to balance their load torque.	
	Torque limiter	Control output torque or torque current so that output torque or torque current are preset limiting value or less. (The torque current limit is only available in IMPG-VC or PM-SVC mode.) - Switchable between 1st and 2nd torque limit values.	
	Torque current limiter	- "Torque limit" and "Torque current limit" are selectable. - "Torque limit" or "Torque current limit" by analog input.	IMPG-VC PM-SVC
	Overload stopping	- When detected torque or current exceed the preset value, inverter will decelerate and stop or will coast to stop a motor.	
	PID Control	- PID processor for process control/dancer control - Normal operation/inverse operation - PID command: Keypad, analog input (from terminals [12], [C1] and [V2]), Multi-step setting(Selectable from 3 points), RS-485 communication - PID feedback value (from terminals [12], [C1] and [V2]) - Alarm output (absolute value alarm, deviation alarm) - Low liquid level stop function - Anti-reset wind-up function - PID output limiter - Integration reset/hold	
	Auto-reset	- The auto-reset function that makes the inverter automatically attempt to reset the tripped state and restart without issuing an alarm output (for any alarm) even if any protective function subject to reset is activated. - The allowable maximum number of reset times for the inverter to automatically attempt to escape the tripped state is 20.	
	Auto search for idling motor speed	- The inverter automatically searches for the idling motor speed to start to drive without stopping. (Motor constants must be needed tuning: Auto-tuning (offline))	
	Automatic deceleration	- If the DC link bus voltage or calculated torque exceeds the automatic deceleration level during deceleration, the inverter automatically prolongs the deceleration time to avoid overvoltage trip. (It is possible to select forcible deceleration actuated when the deceleration time becomes three times longer.) - If the calculated torque exceeds automatic deceleration level during constant speed operation, the inverter avoids overvoltage trip by increasing the frequency.	
	Deceleration characteristic (improved braking capacity)	- The motor loss is increased during deceleration to reduce the regenerative energy in the inverter to avoid overvoltage trip.	
	Auto energy saving operation	- The output voltage is controlled to minimize the total power loss of the motor and the inverter at a constant speed.	
	Overload prevention control	- If the ambient temperature or internal IGBT junction temperature is almost near the overheat level due to overload, the inverter drops its output frequency automatically in order to escape overload situation.	
	Battery/UPS operation	Cancels the undervoltage protection so that the inverter under an undervoltage condition runs the motor with battery/UPS power.	
	Auto-tuning (off-line)	- Measures the motor parameters while the motor is stopped or running, for setting up motor parameters. - Tuning mode to only identify %R1 and %X. - Tuning mode to identify the parameters for PM motor.	
	Auto-tuning (on-line)	- Automatically adjusts motor parameters while the motor is driving in order to prevent the motor speed fluctuation caused by the temperature rise of the motor.	
	Cooling fan ON/OFF control	- Detects inverter internal temperature and stops cooling fan when the temperature is low. - the fan control signal can be output to an external device.	
	1st to 2nd motor settings	- Switchable among the two motors. It is possible to set the base frequency, rated current, torque boost, and electronic thermal slip compensation as the data for 1st to 2nd motors.	

Common Specifications

	Items	Specifications	Remarks
Control	Universal DI	The status of external digital signal connected with the universal digital input terminal is transferred to the host controller.	
	Universal DO	Digital command signal from the host controller is output to the universal digital output terminal.	
	Universal AO	The analog command signal from the host controller is output to the analog output terminal.	
	Speed control	- Notch filter for vibration control (For IMPG-VC) - Selectable among the four set of the auto speed regulator (ASR) parameters. (The PG option card is required.)	IMPG-VC PM-SVC
	Line speed control	In a machine such as winder/unwinder, regulates the motor speed to keep the peripheral speed of the roll constant. (The PG option card is required.)	IMPG-VF
	Positioning control with pulse counter	The positioning control starts from the preset start point and counts the feedback pulses from PG inside the inverter. The motor can be automatically started decelerating to the cleep speed which can be detected the target position so that the motor can stop near the position.(The PG option card is required.)	Excluded IMPG-VC PM-SVC
	Master-follower operation	Enables synchronous operation of two motors equipped with a pulse generator(PG).(The PG option card is required.)	
	Pre-excitation	Excitation is carried out to create the motor flux before starting the motor.(The PG option card is required.)	IMPG-VC
	Zero speed control	The motor speed is held to zero by forcibly zeroing the speed command.(The PG option card is required.)	IMPG-VC
	Servo lock	Stops the motor and holds the motor in the stopped position.(The PG option card is required.)	IMPG-VC
	DC braking	When the run command turns OFF and the motor speed fall below the preset DC braking starting speed, the inverter starts to inject DC current into the motor in order to stop the motor. When the run command turns ON,the inverter starts to inject DC current into the motor in order to pre-excite.	
	Mechanical brake control	- The inverter can output the signal which ON/OFF timing adjusted so that the mechanical brake can be turned in conjunction with detected current, torque, frequency, and release/apply delay timers. - Mechanical brake interlock input	Excluded PM-SVC
	Torque control	- Analog torque/torque current command input - Speed limit function is provided to prevent the motor from becoming out of control. - Torque bias (analog setting, digital setting) (The PG option card is required.)	IMPG-VC
	Rotational direction control	- Select either of reverse or forward rotation prevention.	
	Customizable logic interface	The digital logic circuits and an analog arithmetic circuits can be chosen and connected with digital/analog input/output signals. The simple relay sequence which the customers demands can be constituted and made to calculate. - Logic circuit (Digital) AND, OR, XOR, flip-flops, rising/falling edge detection,counters, etc. (Analog) Addition, subtraction, multiplication, division, limitter, absolute value, sign inversion addition, comparison, highest selection, lowest selection, average value, measure conversion. - Multifunctional timer On-delay, off-delay, pulse train, etc. Setting range: 0.0 to 600 s - Input/output signal terminal input / output, inverter control function - Others The 200 steps are available. Each step has 2 inputs and 1 output.	
	Applicable functions for - Wire drawing machine - Hoist - Spinning machine (Traverse)	The specific functions which is suitable for each application field are realized by customizable logics.	
Indicate	Display	Detachable with 7 segments LEDs (4 digits) , 7 keys(PRG/RESET,FUNC/DATA,UP,DOWN, RUN,STOP,SHIFT) and 6LED indicator (KEYPAD CONTROL,Hz,A,kW,×10,RUN)	
	Running/Stopping	Speed monitor (reference frequency, output frequency, motor speed, load shaft speed, line speed, and speed indication with percent), Output current in RMS[A], Output voltage in RMS[V], Calculated torque [%], Input power [kW], PID command value, PID feedback value, PID output, Timer (Timer operation)[s], Load factor [%], Motor output [kW] Torque current [%] , Magnetic flux command [%], Analog input[%], Input watt hour [kWh] Constant feeding rate time (set value) (min), Constant feeding rate time (running) (s)	
	Life early warning	- The life early warning of the main circuit capacitors, capacitors on the PCBs and the cooling fan can be displayed. - An external output is issued in a transistor output signal. - Outputs the warning when the maintenance time or the number of start times has exceeded the preset. - Ambient temperature: 40°C(104°F) - Load factor: Inverter rated current 100%(HHD spec.), 80%(HND/HD/ND spec.)	

Common Specifications

	Items	Specifications	Remarks
Indicate	Maintenance monitor	- Displays DC link bus voltage, Max. Output current in RMS, Input watt-hour, Input watt-hour data, Temperature (inside the inverter and heat sink, Maximum value of each one), Capacitance of the DC link bus capacitor, Lifetime of DC link bus capacitor (elapsed hours and remaining hours), Cumulative run time of power-ON time counter of the inverter, electrolytic capacitors on the printed circuit boards, cooling fan and each motor, Remaining time before the next motor maintenance, Remaining startup times before the next maintenance, Number of startups (of each motor), Light alarm factors (Latest to 3rd last), Contents and numbers of RS-485 communications errors, Option error factors , Number of option errors ,ROM version of Inverter, Keypad and Option port.	
	I/O checking	Shows the status of the terminal Digital input/output, Relay out, Analog input/output.	
	Locked by password	Limits to change or display in function code .	
	Trip mode	Displays the cause of trip by codes.	
	Light-alarm	Shows the light-alarm display *L-AL*.	
	Running or trip mode	- Trip history: Saves and displays the cause of the last four trips (with a code). - Saves and displays the detailed operation status data of the last four trips.	
Operating environment	Installation location	Indoors	
	Ambient	Standard (Open Type) -10 to +50°C (HHD/HND spec.) -10 to +40°C (HD/ND spec.) NEMA/UL Type 1 -10 to +40°C (HHD/HND spec.) -10 to +30°C (HD/ND spec.)	
	Ambient humidity	5 to 95%RH (without condensation)	
	Atmosphere	Shall be free from corrosive gases, flammable gases, oil mist, dusts, vapor, water drops and direct sunlight. (Pollution degree 2 (IEC60664-1)) The atmosphere must contain only a low level of salt. (0.01 mg/cm2 or less per year)	
	Altitude	1000m or lower If the inverter is used in an altitude above 1000 m, you should apply an output current derating factor as listed in below table.	

Altitude	Output current derating factor
1000m or lower	1.00
1000 to 1500m	0.97
1500 to 2000m	0.95
2000 to 2500m	0.91
2500 to 3000m	0.88

Vibration

Three phase 400V class series	TYPE:0203 or below	TYPE:0240 or above
2 to less than 9Hz	3mm:(Max. amplitude)	3mm:(Max. amplitude)
9 to less than 20Hz	9.8m/s^2	2m/s^2
20 to less than 55Hz	2m/s^2	2m/s^2
55 to less than 200Hz	1m/s^2	1m/s^2

Three phase 200V class series	TYPE:0069 or below
2 to less than 9Hz	3mm:(Max. amplitude)
9 to less than 20Hz	9.8m/s^2
20 to less than 55Hz	2m/s^2
55 to less than 200Hz	1m/s^2

Storage environment	Temperature	-25 to +70°C (in transport) -25 to +65°C (in storage)	Avoid such places where the inverter will be subjected to sudden changes in temperature that will cause condensation to form.
	Relative humidity	5 to 95%RH	
	Atmosphere	The inverter must not be exposed to dust, direct sunlight, corrosive or flammable gases, oil mist, vapor, water drops or vibration. The atmosphere must contain only a low level of salt. (0.01 mg/cm^2 or less per year)	
	Atmospheric pressure	86 to 106kPa (during storage)	
		70 to 106kPa (during transportation)	

*Note : The meaning of the described abbreviations are shown as follows.

VF	V/f control
IM-SVC(DTV)	Speed sensorless vector control (Dynamictorquevector control)
VF with SC	V/f control with slip compensation
IMPG-VF	V/f control with speed sensor (The PG option card is required.)
IMPG-ATB	V/f control with speed sensor (+Auto Torque Boost)(The PG option card is required.)
IMPG-VC	Vector control with speed sensor (The PG option card is required.)
PM-SVC	Magnetic pole position sensorless vector control

Basic Wiring Diagram

With built-in CAN communication port and single analog output

FRN□□□□E2■-○E GA

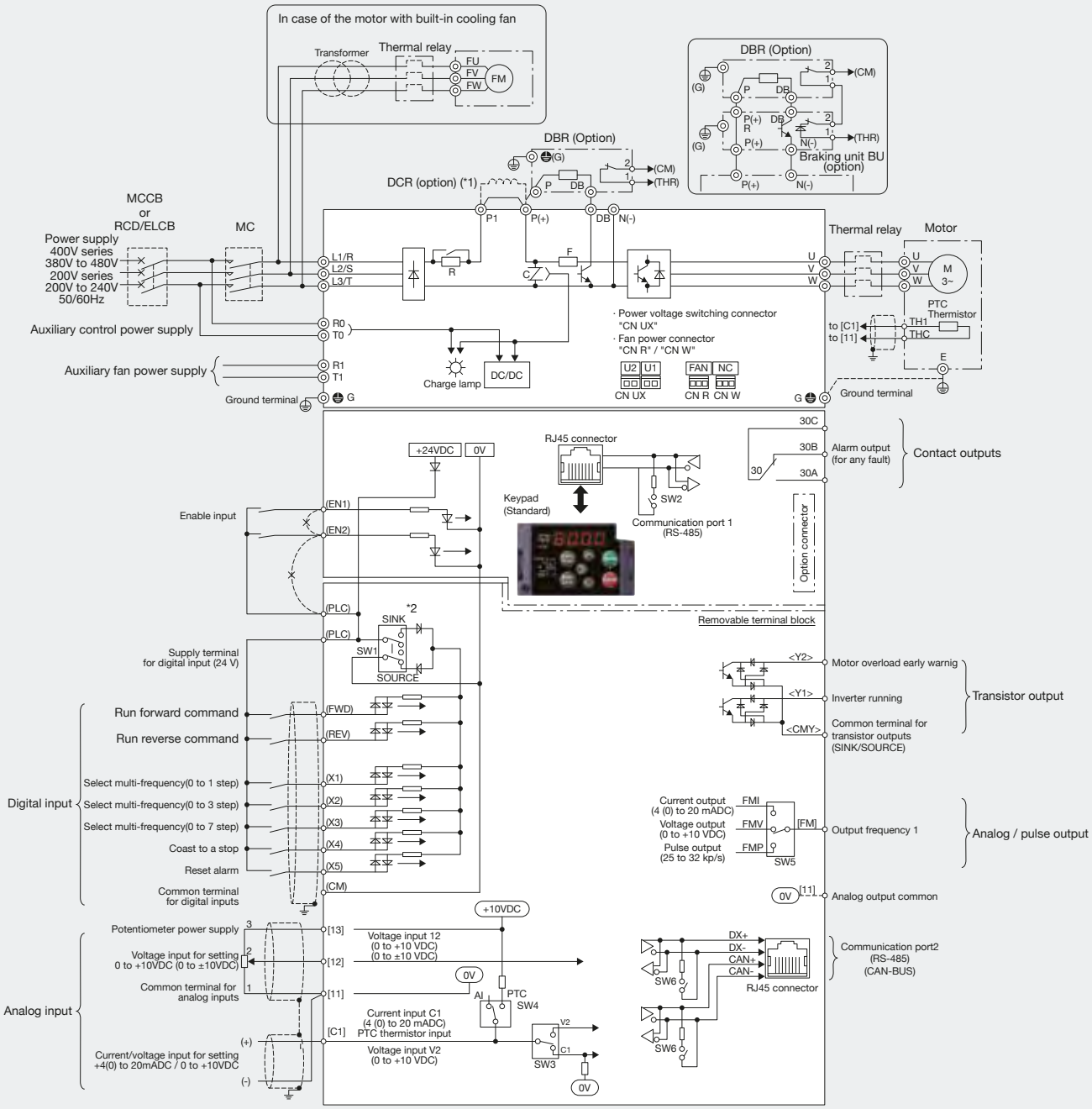

DBR: Dynamic Braking Resister
DCR: DC reactor
RCD: Residual-current-operated protective device
ELCB: Earth leakage circuit breaker
MC: Magnetic contactor
MCCB: Molded case circuit braker

*1 When connecting an optional DC reactor (DCR), remove the jumper bar from the terminals P1 and P(+).
The type 0139 (ND spec), 0168 (HD spec.) and higher types than 0203 are sure to connect the DCR (400V only).
Use a DCR when the capacity of the power supply transformer exceeds 500 kVA and is 10 times or more the inverter rated capacity, or when there are thyristor-driven loads in the same power supply line.
*2 The default setting is "Source logic" for EU model.

NOTE	This wiring diagram is to be used as a reference only when using standard terminal block model. When wiring your inverter and/or before applying power, please always follow the connection diagrams and the relevant information written in the User's Manual.

Terminal Functions

Categoly	Symbol	Name	Functions	Remarks
Main circuit	L1/R, L2/S,L3/T	Main circuit power inputs	Connect the three-phase input power lines.	
	L1/L, L2/N		Connect the single-phase input power lines.	
	R0, T0	Auxiliary power input for the control circuit	For a backup of the control circuit power supply, connect AC power lines same as that of the main power input.	Type 0059 or above (400V only)
	R1, T1	Auxiliary power input for the cooling fans	Normally, no need to use these terminals.Use these terminals for an auxiliary power input of the fans in a power system using a power regenerative PWM converter.	Type 0203 or above (400V only)
	U, V, W	Inverter outputs	Connect a three-phase motor.	
	P(+), P1	For DC REACTOR connection	Connects a DC REACTOR	
	P(+), N(-)	For BRAKING UNIT connection/For DC bus	Connects a braking resistor via the braking unit. Used for a DC bus connection system.	
	P(+), DB	Braking resistor	Connect an external braking resistor (option).	Type 0072 or below (400V series) Type 0069 or below (200V series)
	⊕G	Grounding for inverter	Grounding terminals for the inverter.	
Analog inputs	[13]	Power supply for the potentiometer	Power supply (+10 VDC) for frequency command potentiometer (Variable resistor : 1 to 5 kΩ is applicable). The potentiometer of 1/2 W rating or more should be connected.	Maximum supply rating : 10 VDC, 10 mADC.
	[12]	Analog setting voltage input	- External input voltage to be used as a below command.	Input impedance : 22 kΩ Maximum input level : ±15 VDC Input level is limited among -10 to 10 VDC regardless of excessive input of ±10 VDC. Gain : 0 to 200% Offset : 0 to ±5% Bias : ±100% Filter : 0.00 to 5.00s
		<Normal operation>	0 to +10 VDC / 0 to 100% (0 to +5 VDC / 0 to 100%) 0 to ±10 VDC / 0 to ±100% (0 to ±5 VDC / 0 to ±100%)	
		<Inverse operation>	+10 to 0 to -10VDC / -100% to 0 to 100% -10V to 0 to +10VDC / +100% to 0 to -100%	
		(Main frequency setting)	-Use as the main frequency command set point.	
		(PID control)	-Use as PID command value or PID feedback signal.	
		(Auxiliary frequency setting1,2)	-Use as additional auxiliary setting to various frequency setting.	
		(Analog input monitor)	-By inputting analog signals from various sensors such as the temperature sensors in air conditioners to the inverter, you can monitor the state of external devices via the communications link. By using an appropriate display coefficient, you can also have various values to be converted into physical quantities such as temperature and pressure before they are displayed.	
		(Gain setting)	-Use as gain for the frequency command. -0% to 200% for 0 to 10 VDC	
		(Torque limit value)	-Use as analog torque limit value	
		(Torque command/Torque current command)	-Used as analog torque command value / Torque current command value. (The PG option card is required.)	
		(Torque bias amount)	-Used as analog torque bias command value.(The PG option card is required.)	
		(Speed limit value)	-Used as analog speed limit value of FWD/REV.(The PG option card is required.)	
	[C1] (C1)	Analog setting voltage input	- External input voltage to be used as a below command.	Input impedance: 250Ω Maximum input 30 mADC Input level is limited up to 20 mADC regardless of excessive input of 20 mADC. Gain: 0 to 200% Offset: 0 to ±5% Bias: ±100% Filter: 0.00 to 5.00s
		<Normal operation>	4 to 20 mADC / 0 to 100%/ -100% to 0 to 100% (*1) 0 to 20 mADC / 0 to 100%/ -100% to 0 to 100% (*1)	
		<Inverse operation>	20 to 4 mADC / 0 to 100%/ -100% to 0 to 100% (*1) 20 to 0 mADC / 0 to 100%/ -100% to 0 to 100% (*1)	
		(Main frequency setting)	-Use as the main frequency command set point.	
		(PID control)	-Use as PID command value or PID feedback signal.	
		(Auxiliary frequency setting1,2)	-Use as additional auxiliary setting to various frequency setting.	
		(Analog input monitor)	-By inputting analog signals from various sensors such as the temperature sensors in air conditioners to the inverter, you can monitor the state of external devices via the communications link. By using an appropriate display coefficient, you can also have various values to be converted into physical quantities such as temperature and pressure before they are displayed.	
		(Gain setting)	-Use as gain for the frequency command. -0 to 200% for 4(0) to 20mADC	
		(Torque limit value)	-Use as analog torque limit value	
		(Torque command/Torque current command)	-Used as analog torque command value / Torque current command value. (The PG option card is required.)	
		(Torque bias amount)	-Used as analog torque bias command value.(The PG option card is required.)	
		(Speed limit value)	-Used as analog speed limit value of FWD/REV.(The PG option card is required.)	
	[C1] (V2)	Analog setting voltage input	- External input voltage to be used as a below command.	Input impedance: 22kΩ Maximum input ±15 VDC Input level is limited among -10 to 10 VDC regardless of excessive input of ±10 VDC. Gain: 0 to 200% Offset: 0 to ±5% Bias: ±100% Filter: 0.00 to 5.00s
		<Normal operation>	0 to +10 VDC/ 0 to 100% /-100 to 0 to 100% (0 to +5 VDC / 0 to 100%) 0 to +10 VDC/ 0 to ±100% /-100 to 0 to 100%(*1) (0 to ±5 VDC / 0 to ±100%)	
		<Inverse operation>	+10 to 0VDC/0 to 100%/-100% to 0 to 100% +10 to 0 VDC / 0 to ±100% /-100 to 0 to 100%(*1) (+5 to 0 VDC/ 0 to ±100%)	
		(Main frequency setting)	-Use as the main frequency command set point.	
		(PID control)	-Use as PID command value or PID feedback signal.	
		(Auxiliary frequency setting1,2)	-Use as additional auxiliary setting to various frequency setting.	
		(Analog input monitor)	-By inputting analog signals from various sensors such as the temperature sensors in air conditioners to the inverter, you can monitor the state of external devices via the communications link. By using an appropriate display coefficient, you can also have various values to be converted into physical quantities such as temperature and pressure before they are displayed.	
		(Gain setting)	-Use as gain for the frequency command. -0 to 200% for 0 to 10 VDC	
		(Torque limit value)	-Used as analog torque limit value	
		(Torque command/Torque current command)	-Used as analog torque command value / Torque current command value (The PG option card is required.)	
		(Torque bias amount)	-Used as analog torque bias command value.(The PG option card is required.)	
		(Speed limit value)	-Used as analog speed limit value of FWD/REV.(The PG option card is required.)	
	[C1] (PTC)	(PTC thermistor)	-PTC thermistor connection to protect the motor overheat.	
	[11]	Analog common	Common terminals for analog input signals [12], [13], [C1], and analog output signals [FM].	This terminal is electrically isolated from terminal [CM], [CMY].

Terminal Functions

Categoly	Symbol	Name	Functions	Remarks
Analog outputs	[FM] [FM2]*2	Analog monitor <Voltage output>(*3)	The output can be either analog DC voltage (0 to 10 VDC), analog DC current (4(0) to 20 mADC) or pulse train (25 to 32000 p/s). Any one item can be selected from the following items. 0 to +10 VDC / 0 to 100% (0 to +5 VDC / 0 to 100%) Input impedance of the external device: Min. 5kΩ (at 0 to 10 VDC output) (While the terminal is outputting 0 to 10 VDC, it is capable of driving up to two analog voltmeters with 10 kΩ impedance.)	Gain: 0 to 300%
		<Current output>(*3)	4 to 20 mADC / 0 to 100% 0 to 20 mADC / 0 to 100% Input impedance of the external device: Max. 500Ω (at 4(0) to 20 mA DC output)	
		Pulse monitor(*3)	Output form Pulse output: 25 to 32000 p/s at full scale, Pulse duty: approx. 50%	
		Monitor data	•Output frequency1 (Before slip compensation) •Output frequency2 (After slip compensation) •Output current •Output voltage •Output torque •Load factor •Input power •PID feedback amount (PV) •Actual speed / Estimated speed •DC link bus voltage •Universal AO •Motor output •Analog output calibration •PID command (SV) •PID output (MV) •Position deviation in synchronous operation(The PG option card is required.) •Customizable logic output 1 to 10 •Inverter cooling fin temperature •PG feedback value (The PG option card is required.)	
Digital inputs	[CM]	Digital Common	Common terminals for the digital input signals.	
	[X1]	Digital input 1	•Select multi-frequency (0 to 1 steps) •Select multi-frequency (0 to 3 steps) •Select multi-frequency (0 to 7 steps) •Select multi-frequency (0 to 15 steps) •Select ACC/DEC time (2 steps) •Select ACC/DEC time (4 steps) •Enable 3-wire operation •Coast to a stop •Reset alarm •Enable external alarm trip •Ready for jogging •Select frequency command 2/1 •Select motor 2 (M2) •Enable DC braking •Select torque limiter level 2/1 •Switch to commercial power (50 Hz) •Switch to commercial power (60 Hz) •UP (Increase output frequency) •DOWN (Decrease output frequency) •Enable data change with keypad •Cancel PID control •Switch normal/inverse operation •Interlock •Cancel torque control •Enable communications link via RS-485 or fieldbus (option) •Universal DI •Enable auto search for idling motor speed at starting •Force to stop •Pre-excitation (EXITE) •Reset PID integral and differential components •Hold PID integral component •Select local (keypad) operation •Activate the limit switch at start point •Start/reset •Switch to the serial pulse receiving mode •Enter the return mode •Enable overload stop •Servo lock command •Pulse train input •Pulse train sign •Battery / UPS operation •Select torque bias 1 •Select torque bias 2 •Hold torque bias •Check brake control •Line speed control •Cancel line speed control •Hold the linel speed control frequency in the memory •Count the run time of commercial power-driven motor 1 •Count the run time of commercial power-driven motor 2 •Select droop control •Select parameter 1 •Select parameter 2 •Cancel customizable logic •Clear all customizable logic timers •Cancel automatic deceleration •Run forward command •Run reverse command •No function assigned •PID multistep command 1 •PID multistep command 2 -SINK/SOURCE is switchable by using the internal slide switch. -These function codes may also switch the logic system between normal and negative to define how the inverter logic interprets either ON or OFF status of each terminal. -Terminal [X5] can be defined as a pulse train input terminal with the function codes. (Using the PG interface interface card makes the pulse train input function assigned to the inverter's terminal [X5] invalid.) Use exclusively with one digital input. 0 to 30kHz(Open Collector) / 100kHz(Push-pull)	Operation current at ON Source current: 2.5 to 5 mA Source current: 9.7 to 16 mA (terminal [X5])---Pulse train input Voltage level: 2 V or below Operation current at OFF Allowable leakage current: 0.5 mA or less Voltage: 22 to 27 VDC
	[X2]	Digital input 2		
	[X3]	Digital input 3		
	[X4]	Digital input 4		
	[X5]	Digital input 5 / Pulse train input		
	[FWD]	Run forward command		
	[REV]	Run reverse command		

Terminal Functions

Categoly	Symbol	Name	Functions	Remarks
Transistor outputs	[PLC]	PLC signal power	(1) Power supply for programmable controller output logic circiut (Max DC24V DC100mA.) (2) Power supply for transistor output logic circuit	24 VDC (22 to 27 VDC), Max. 100 mA This terminal is electrically isolated from terminal [11]s and [CMY]. allowable range: +22 to +27 VDC, 50 mA max. Leakage current 0.1mA or less
	[CM]	Digital input common	Common terminals for the digital input signals.	
	[Y1]	Transistor output 1	•Inverter running •Inverter output on •Frequency (speed) arrival signal •Frequency (speed) arrival signal 2 •Frequency (speed) arrival signal 3 •Frequency (speed) detected •Frequency (speed) detected 2 •Frequency (speed) detected 3 •Undervoltage detected (Inverter stopped) •Torque polarity detected •Inverter output limiting •Auto-restarting after momentary power failure •Deceleration after momentary power failure detected •Motor overload early warning •Inverter output limiting with delay •Keypad operation enabled •Inverter ready to run •Select AX terminal function (For MC on primary side) •Stage transition signal for pattern operation •Cycle completion signal for pattern operation •Pattern operation stage 1 •Pattern operation stage 2 •Pattern operation stage 4 •Cooling fan in operation •Auto-resetting •Universal DO •Heat sink overheat early warning •Synchronization completed •Lifetime alarm •Reference loss detected •Overload prevention control •Current detected •Current detected 2 •Current detected 3 •Low current detected •PID alarm •Under PID control •Motor stopped due to slow flowrate under PID control •Low output torque detected •Torque detected 1 •Torque detected 2 •Motor 1 selected •Motor 2 selected •Running forward •Running reverse •In remote operation •Motor overheat detected by thermistor •Brake signal •Terminal [C1] wire break •Speed valid •Speed agreement •PG error detected •Low Voltage detected •Stop position override alarm •Current position count overflowed •Positioning completion signal •Timer output •Maintenance timer •Frequency arrival signal •Alarm indication 1 •Alarm indication 2 •Alarm indication 4 •Alarm indication 8 •Light alarm •Alarm output (for any alarm) •Enable circuit failure detected •Enable input OFF •Braking transistor broken •Customizable logic output signal 1 •Customizable logic output signal 2 •Customizable logic output signal 3 •Customizable logic output signal 4 •Customizable logic output signal 5 •Customizable logic output signal 6 •Customizable logic output signal 7 •Customizable logic output signal 8 •Customizable logic output signal 9 •Customizable logic output signal 10	
	[Y2]	Transistor output 2		
	[CMY]	Transistor output common	Common terminal for transistor output signal terminals.	This terminal is electrically isolated from terminal [11]s and [CM]s.
Relay output	[30A], [30B],[30C]	Alarm relay output (for any error)	-This outputs a non-voltage(dry) contact signal (1c) when the inverter is stopped with the protective function. -As a general-purpose relay output, the same functions as terminal Y can be assigned. -The logic value is switchable between "[30A] and [30C] are excited" and "non-excited."	Contact rating: 250 VAC, 0.3 A cosø=0.3 48 VDC, 0.5A Contact life: 200000 times (Switching at intervals of one second)
Functional safety	[EN1], [EN2]	Enable Input 1 Enable Input 2	Compliance with EN ISO13849-1;2008 Cat.3 PL:e (Pending) -Turning off the circuit between terminals [EN1] and [PLC] or terminals [EN2] and [PLC] stops the inverter's output transistor. (Safe Torque Off: STO) -These terminals are exclusively used for the source mode input and cannot be switched to the sink mode. -If either one of these input terminals is kept OFF for 50 ms or more, the inverter interprets it as a discrepancy, causing an alarm ECF. This alarm state can be cleared only by turning the inverter off and on.	Source current at Turn-on : 5-10mA Threshold voltage between [PLC] - [EN] : 2V (Turn off) : 22 to 27V (Turn on) leakage current : 0.5mA or less
	[PLC]	PLC signal power	(1) Power supply for programmable controller output logic circiut (Max DC24V DC100mA.) (2) Power supply for transistor output logic circuit	

Terminal Functions

Categoly	Symbol	Name	Functions	Remarks
Communication	RJ-45 connector for the keypad	Standard RJ-45 connector (RS-485 communication port 1)	(1) Used to connect the inverter with the keypad. The inverter supplies the power to the keypad through the pins specified below. The extension cable for remote operation also uses wires connected to these pins for supplying the keypad power. (2) Remove the keypad from the standard RJ-45 connector, and connect the RS-485 communications cable to control the inverter through the PC or PLC (Programmable Logic Controller). The protocol selection is available from the following. - Modbus RTU - Fuji general-purpose inverter protocol - Asynchronous start-stop system • Half-duplex - Max. transmission cable length : 1640 ft (500 m) - Maximum communication speed : 38.4kbps	
	[DX+], [DX-], [SD]	Standard RJ-45 connector (RS-485 communication port 2) (*4)	A communications port transmits data through the RS-485 multipoint protocol between the inverter and a personal computer or other equipment such as a PLC. The protocol selection is available from the following. - Modbus RTU - Fuji general-purpose inverter protocol - Asynchronous start-stop system • Half-duplex - Max. transmission cable length : 1640 ft (500 m) - Maximum communication speed : 38.4kbps	
	[CAN+], [CAN-], [SHLD]	Standard RJ-45 connector (CAN communication port) (*5)	Commicication Profile: CiA CANOpen DS-301 and DSP-402	

(*1) In case of applying bais/gain function.
(*2) Only FRN□□□E2□ - □GB has the FM2 output. Not pulse monitor but analog monitor (voltage / current output) is available.
(*3) Exclusive use. Need to swich on the terminal PCB.
(*4) FRN□□□E2□ - □GA has the RJ-45 connector on the terminal PCB. The CAN bus communication is also available via this connector. But it can not use with RS-485 communication at the same time.
FRN□□□E2□ - □GB has the bar terminal on the terminal PCB instead of the RJ45 connector. The CAN bus communication is not available in this type.
(*5) In the RJ-45 connector on the terminal PCB. Concurrent use with RS-485 communications is not available.

Keypad

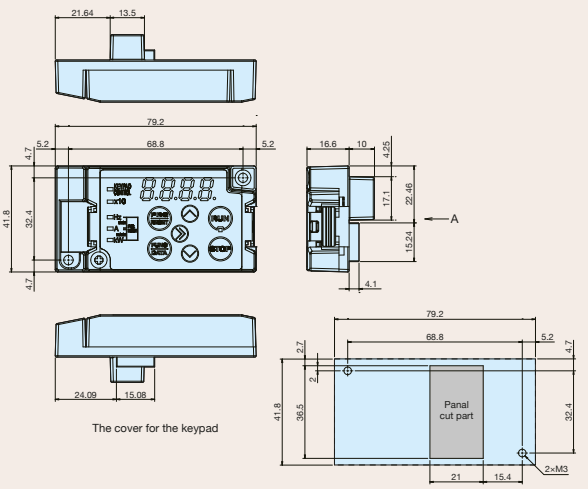

Figure of panel cut dimensions (Arrow A)

TP-A1-E2C Multi function Keypad (Option)

[Unit:mm]

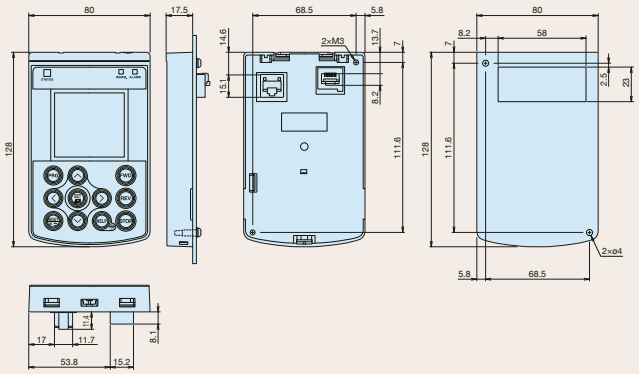

Type

How To Read The Model Number

FRN 0022 E 2 S - 4 □

Series name

FRN	FRENIC Series

Three phase 400V class:
Rating current level of ND specification
[Model: 0002 to 0590]
Three phase 200V class:
Rating current level of HND specification
[Model: 0001 to 0115]
Single phase 200V class:
Rating current level of HHD specification
[Model: 0001 to 0011]

Applicable tiled
For industrial, High performance, Multiple Functionality

Development code 2: 2

Destination:
E: Europe
G●: Global
●A: 1 CAN terminal, 1 analog current output
●B: NONE CAN terminal, 2 analog current output

Input power supply:
4: Three phase 400V class
2: Three phase 200V class
7: Single phase 200V class

S: Standard (basic type)
E: EMC filter built-in type

External Dimensions

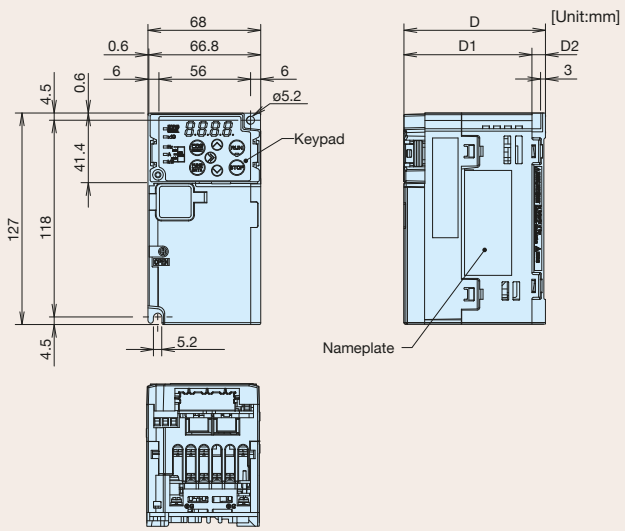

Power supply voltage	Inverter type	Dimension [mm]		
		D	D1	D2
3-phase 200V series	FRN0001E2S-2G□	85	77	8
	FRN0002E2S-2G□	85	77	8
	FRN0004E2S-2G□	100	77	23
	FRN0006E2S-2G□	132	84	48
1-phase 200V series	FRN0001E2S-7G□	85	77	8
	FRN0002E2S-7G□	85	77	8
	FRN0003E2S-7G□	107	84	23
	FRN0005E2S-7G□	152	104	48

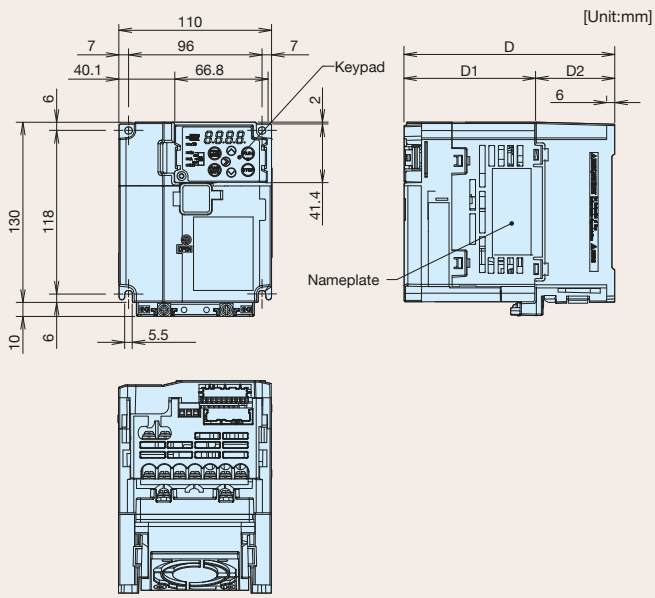

Power supply voltage	Inverter type	Dimension [mm]		
		D	D1	D2
3-phase 400V series	FRN0002E2S-4G□	119	85	34
	FRN0004E2S-4G□	143	85	58
	FRN0006E2S-4G□	143	85	58
	FRN0007E2S-4G□	143	85	58
3-phase 200V series	FRN0010E2S-2G□	143	85	58
	FRN0012E2S-2G□	143	85	58
1-phase 200V series	FRN0008E2S-7G□	153	95	58

External Dimensions

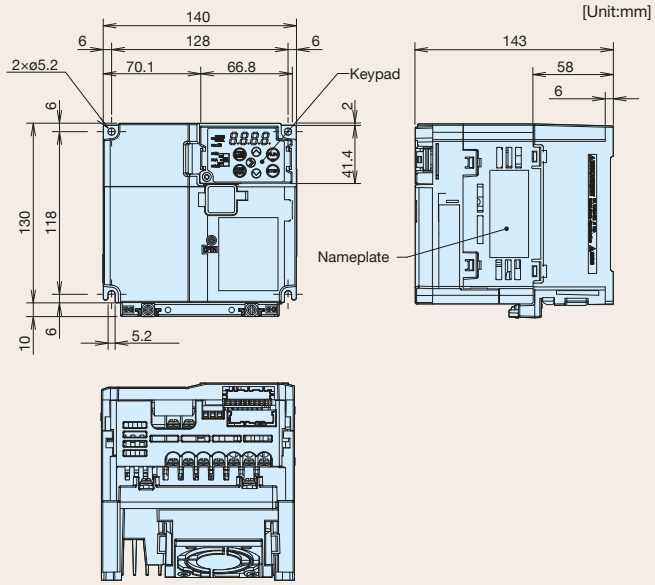

Power supply voltage	Inverter type
3-phase 400V series	FRN0012E2S-4G□
3-phase 200V series	FRN0020E2S-2G□
1-phase 200V series	FRN0011E2S-7G□

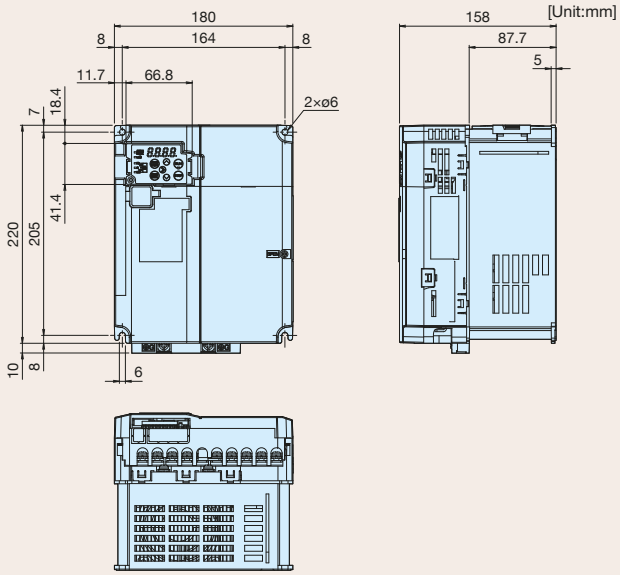

Power supply voltage	Inverter type
3-phase 400V series	FRN0022E2S-4□
	FRN0029E2S-4□
3-phase 200V series	FRN0030E2S-2□
	FRN0040E2S-2□

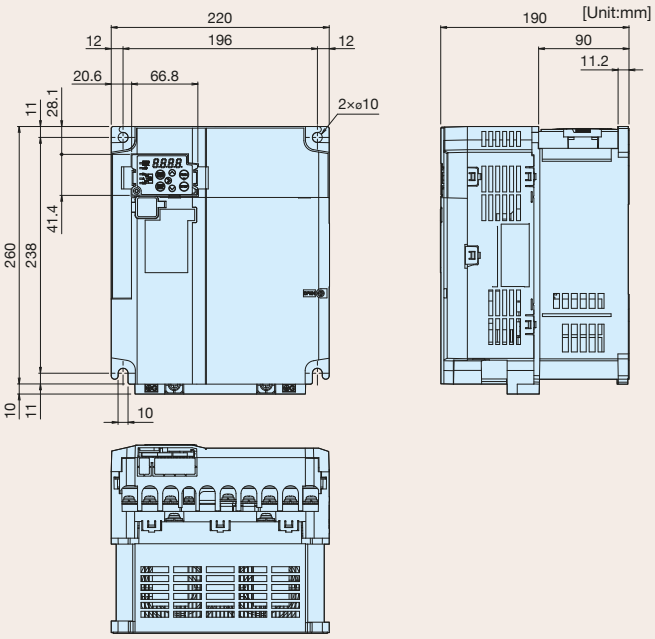

Power supply voltage	Inverter type
3-phase 400V series	FRN0037E2S-4□
	FRN0044E2S-4□
3-phase 200V series	FRN0056E2S-2□
	FRN0069E2S-2□

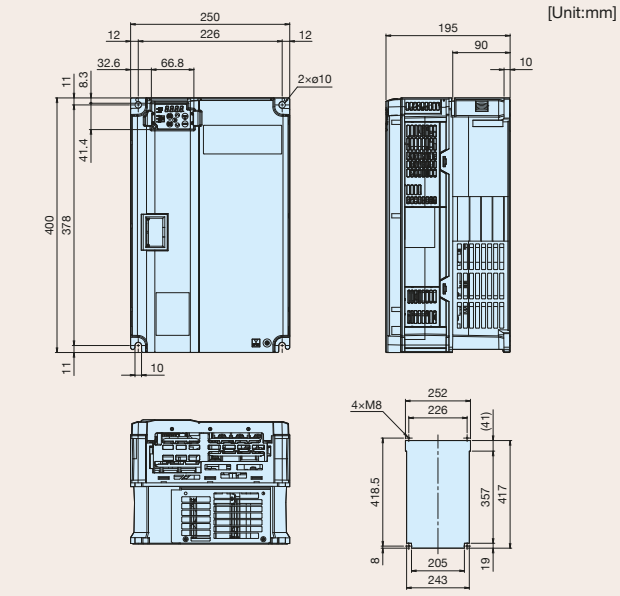

Power supply voltage	Inverter type
3-phase 400V series	FRN0059E2■-4□
	FRN0072E2■-4□
3-phase 200V series	FRN0088E2■-2□
	FRN0115E2■-2□

External Dimensions

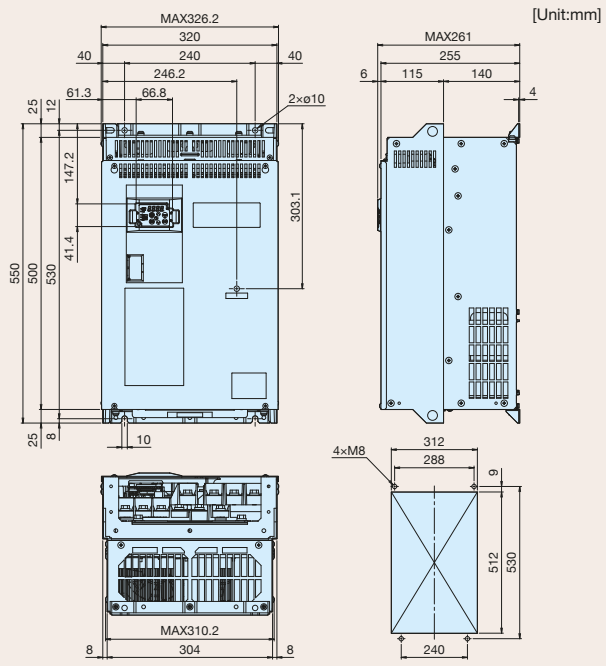

Power supply voltage	Inverter type
3-phase 400V series	FRN0085E2■-4□
	FRN0105E2■-4□

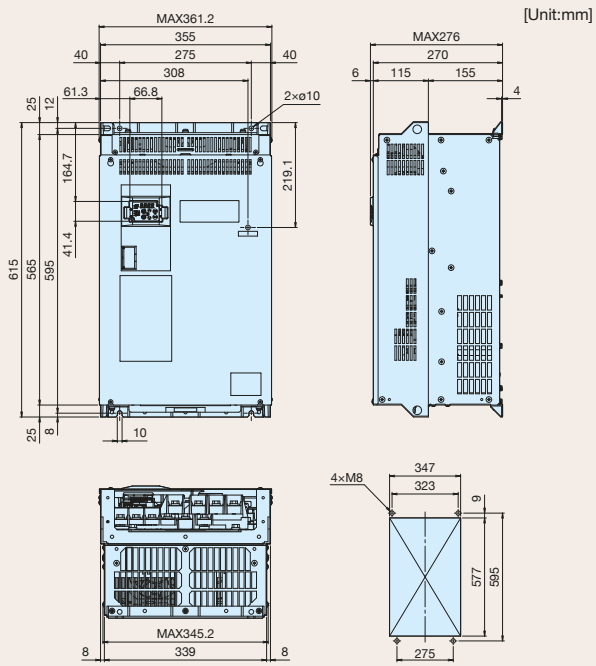

Power supply voltage	Inverter type
3-phase 400V series	FRN0139E2■-4□

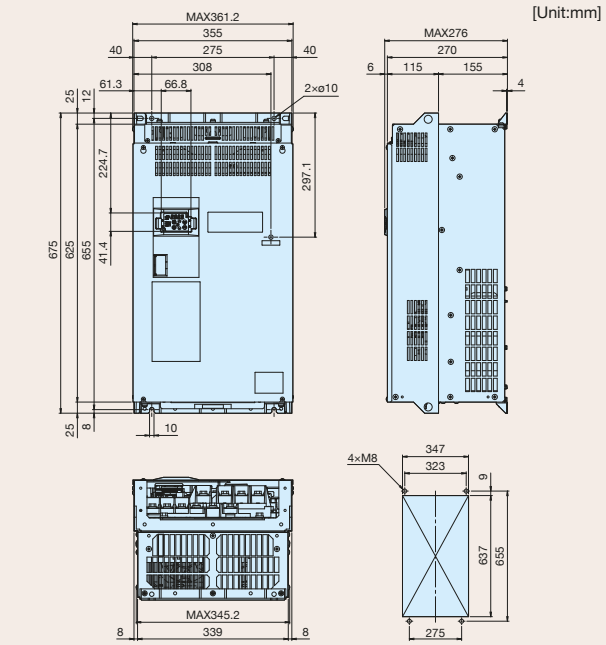

Power supply voltage	Inverter type
3-phase 400V series	FRN0168E2■-4□

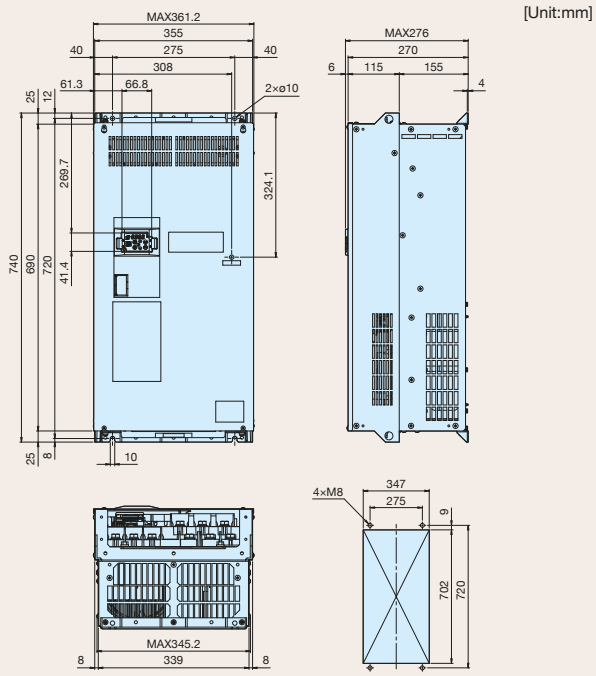

Power supply voltage	Inverter type
3-phase 400V series	FRN0203E2■-4□

External Dimensions

[Unit:mm]

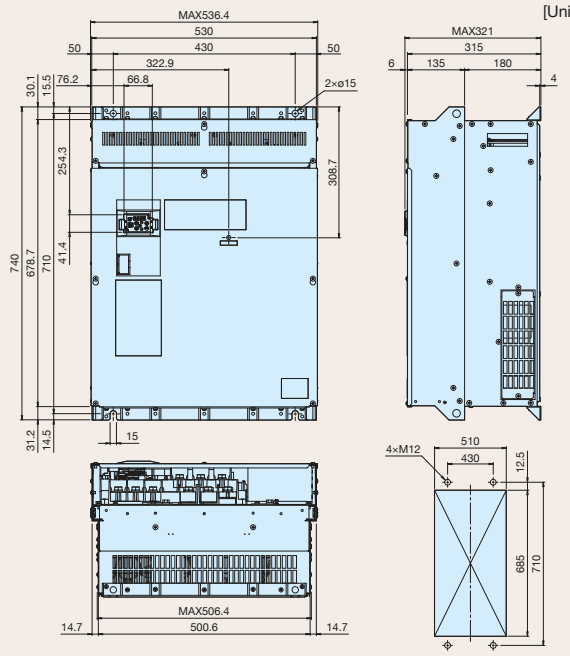

Power supply voltage	Inverter type
3-phase 400V series	FRN0240E2■-4□
	FRN0290E2■-4□

[Unit:mm]

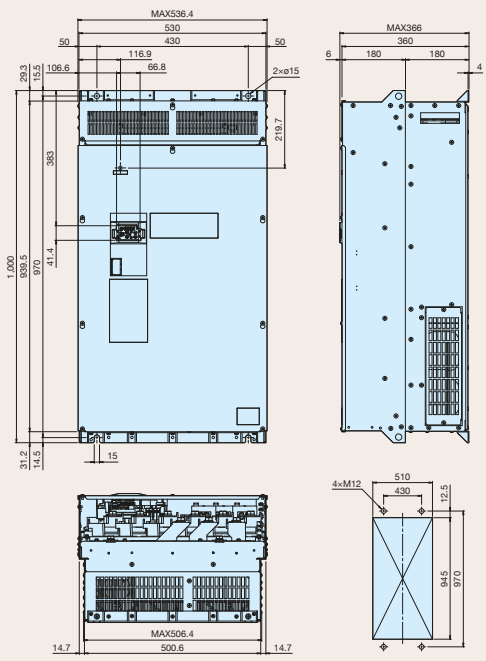

Power supply voltage	Inverter type
3-phase 400V series	FRN0361E2■-4□
	FRN0415E2■-4□

[Unit:mm]

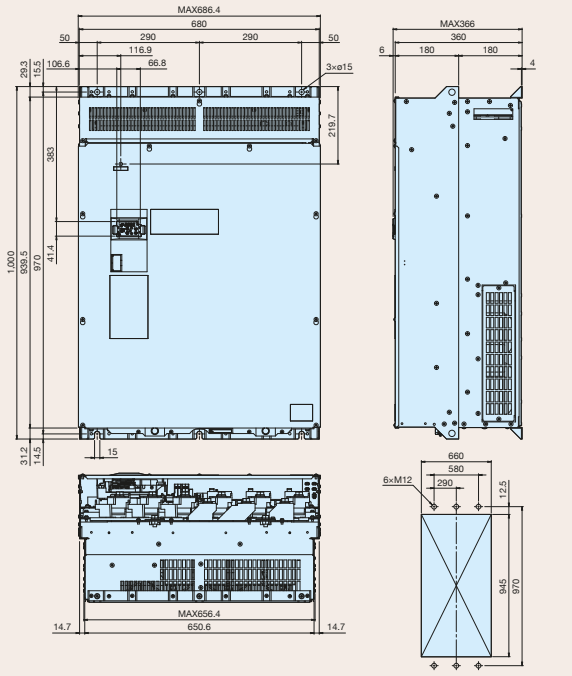

Power supply voltage	Inverter type
3-phase 400V series	FRN0520E2■-4□
	FRN0590E2■-4□

[Unit:mm]

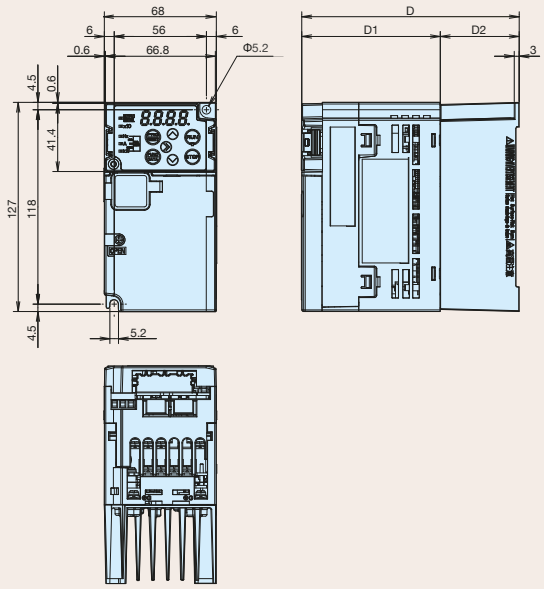

Power supply voltage	Inverter type	Dimension [mm]		
		D	D1	D2
3-phase 200V series	FRN0001E2E-2GA	112	104	8
	FRN0002E2E-2GA	112	104	8
	FRN0004E2E-2GA	127	104	23
	FRN0006E2E-2GA	152	104	48
1-phase 200V series	FRN0001E2E-7G□	112	104	8
	FRN0002E2E-7G□	112	104	8
	FRN0003E2E-7G□	127	104	23

External Dimensions

[Unit:mm]

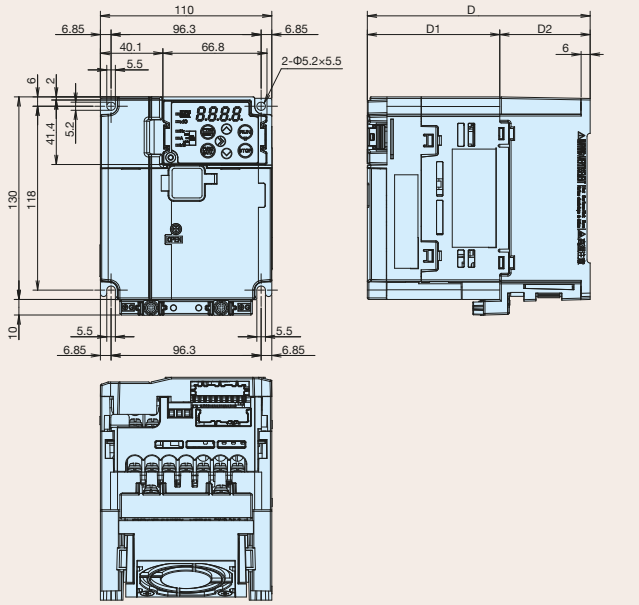

Power supply voltage	Inverter type	Dimension [mm]		
		D	D1	D2
3-phase 400V series	FRN0002E2E-4G□	162	128	34
	FRN0004E2E-4G□	186	128	58
1-phase 200V series	FRN0005E2E-7G□	129	95	34

[Unit:mm]

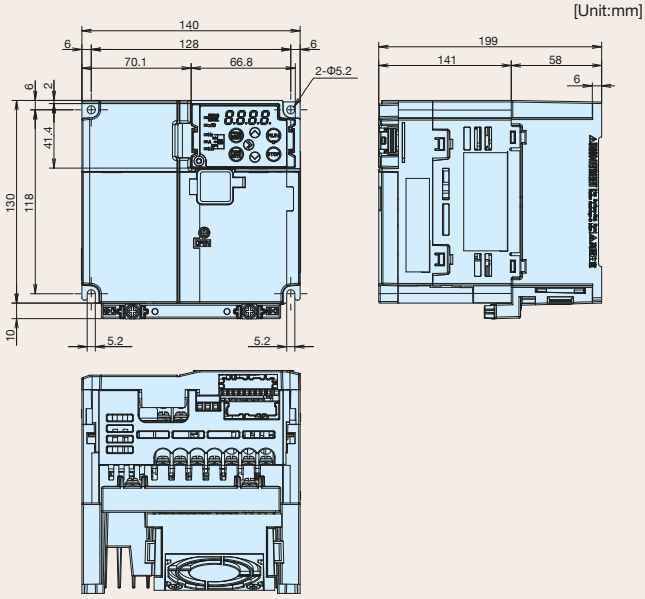

Power supply voltage	Inverter type
3-phase 400V series	FRN0006E2E-4G□
	FRN0007E2E-4G□
	FRN0012E2E-4G□
3-phase 200V series	FRN0010E2E-2GA
	FRN0012E2E-2GA
	FRN0020E2E-2GA
1-phase 200V series	FRN0008E2E-7G□
	FRN0011E2E-7G□

[Unit:mm]

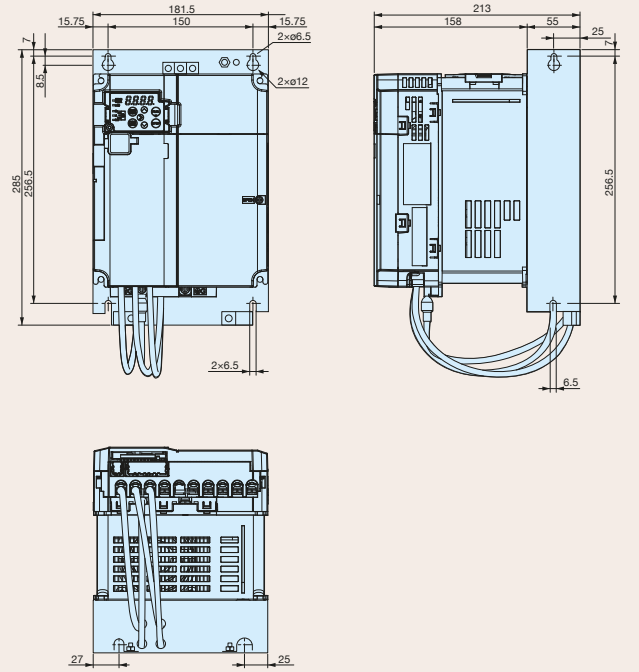

Power supply voltage	Inverter type
3-phase 400V series	FRN0022E2E-4E
	FRN0029E2E-4E

[Unit:mm]

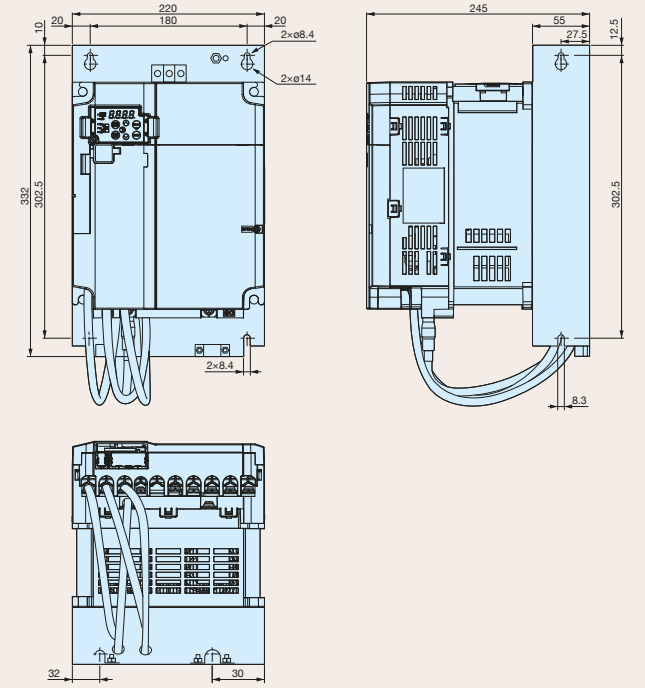

Power supply voltage	Inverter type
3-phase 400V series	FRN0037E2E-4E
	FRN0044E2E-4E

Options

Adapter

Type	Option	Functions
OPC-E2-ADP1	Mounting adapter for option card	ADP1:The adapter is mounted on the front side of the inverter. The adapter is used from 0002 to 0044 of 400V, 0001 to 0069 of 200V for FRENIC-Ace.
OPC-E2-ADP2		ADP2:The adapter is mounted inside of the inverter. The adapter is used from 0059 to 0072 of 400V , 0069 to 0115 of 200V for FRENIC-Ace.
OPC-E2-ADP3		ADP3:The adapter is mounted inside of the inverter. The adapter is used in more than 0085 of 400V for FRENIC-Ace.

Communication, I/O Parts

Type	Option	Functions
OPC-DEV	DeviceNet communications card	The DeviceNet interface option enables the FRENIC-Ace series of the inverters to interface with DeviceNet and the FRENIC-Ace can be operated as a DeviceNet slave.
OPC-CCL	CC-Link communications card	The CC-Link interface option enables the FRENIC-Ace series of the inverters to interface with CC-Link and the FRENIC-Ace can be operated as a CC-Link slave.
OPC-DIO	Digital I/O interface card	DI: The frequency set-point can be given by 8,12 bits and BCD code(0 to 99.9/0 to 999) and extended 13 digital inputs are available mounting this card in the inverter. DO: The monitoring with 8bit binary code and the digital outputs (extended 8 point) are available.
OPC-AIO	Analog I/O interface card	The Analog I/O interface card enables the FRENIC-Ace series of the inverter to input analog set-points to the inverter and output analog monitors from the inverter.

* Parts adapter is necessary on the occasion of setting.

Parts Using The Control Terminal Stand

Type	Option	Functions
OPC-E2-RS	RS485 communications card	The RS-485 communications card provides two ports exclusively designed for use with the FRENIC-Ace series of the inverters.
OPC-E2-PG	PG interface (5V) card	Speed control ,position control and synchronous drive are available mounting this card in the inverter. • Open collector (pull-up resistor: 620Ω):30kHz • Complementary (totem-pole push-pull) • Voltage output
OPC-E2-PG3	PG interface (12/15V) card	Speed control, position control and synchronous drive are available mounting this card in the inverter. • Open collector (pull-up resistor: 2350Ω):30kHz • Complementary (totem-pole push-pull) • Voltage output:100kHz

Keypad

Type	Option	Functions
TP-A1-E2C	Multi-functional keypad	LCD(Liquid Crystal Display) with a back light.

NEMA1 Kit

Power supply Voltage	Inverter type	Option type
Three-phase 400V	FRN0059E2■-4#	NEMA1-72E2-4
	FRN0072E2■-4#	
	FRN0085E2■-4#	NEMA1-105E2-4
	FRN0105E2■-4#	
	FRN0139E2■-4#	NEMA1-203E2-4
	FRN0168E2■-4#	
	FRN0203E2■-4#	
	FRN0240E2■-4#	NEMA1-110G1-4
	FRN0290E2■-4#	
	FRN0361E2■-4#	NEMA1-160G1-4
	FRN0415E2■-4#	
	FRN0520E2■-4#	NEMA1-590E2-4
	FRN0590E2■-4#	

#: Destination (A: for Asia, E: for Europe, K: for Korea)
■: S: Standard (basic type), E: EMC filter built-in type (0059 to 0590)

NOTES

When running general-purpose motors

- **Driving a 400V general-purpose motor**
  When driving a 400V general-purpose motor with an inverter using extremely long cables, damage to the insulation of the motor may occur. Use an output circuit filter (OFL) if necessary after checking with the motor manufacturer. Fuji's motors do not require the use of output circuit filters because of their reinforced insulation.
- **Torque characteristics and temperature rise**
  When the inverter is used to run a general-purpose motor, the temperature of the motor becomes higher than when it is operated using a commercial power supply. In the low-speed range, the cooling effect will be weakened, so decrease the output torque of the motor. If constant torque is required in the low-speed range, use a Fuji inverter motor or a motor equipped with an externally powered ventilating fan.
- **Vibration**
  When the motor is mounted to a machine, resonance may be caused by the natural frequencies, including that of the machine. Operation of a 2-pole motor at 60Hz or more may cause abnormal vibration.
  * Study use of tier coupling or dampening rubber.
  * It is also recommended to use the inverter jump frequency control to avoid resonance points.
- **Noise**
  When an inverter is used with a general-purpose motor, the motor noise level is higher than that with a commercial power supply. To reduce noise, raise carrier frequency of the inverter. High-speed operation at 60Hz or more can also result in more noise.

When running special motors

- **Explosion-proof motors**
  When driving an explosion-proof motor with an inverter, use a combination of a motor and an inverter that has been approved in advance.
- **Brake motors**
  For motors equipped with parallel-connected brakes, their braking power must be supplied from the primary circuit (commercial power supply). If the brake power is connected to the inverter power output circuit (secondary circuit) by mistake, problems may occur.
  Do not use inverters for driving motors equipped with series-connected brakes.
- **Geared motors**
  If the power transmission mechanism uses an oil-lubricated gearbox or speed changer/reducer, then continuous motor operation at low speed may cause poor lubrication. Avoid such operation.
- **Single-phase motors**
  Single-phase motors are not suitable for inverter-driven variable speed operation. Use three-phase motors.

Environmental conditions

- **Installation location**
  Use the inverter in a location with an ambient temperature range of -10 to 50˚C.
  The inverter and braking resistor surfaces become hot under certain operating conditions. Install the inverter on nonflammable material such as metal.
  Ensure that the installation location meets the environmental conditions specified in "Environment" in inverter specifications.

Combination with peripheral devices

- **Installing a molded case circuit breaker (MCCB)**
  Install a recommended molded case circuit breaker (MCCB) or an earth leakage circuit breaker (ELCB) in the primary circuit of each inverter to protect the wiring. Ensure that the circuit breaker capacity is equivalent to or lower than the recommended capacity.
- **Installing a magnetic contactor (MC) in the output (secondary) circuit**
  If a magnetic contactor (MC) is mounted in the inverter's secondary circuit for switching the motor to commercial power or for any other purpose, ensure that both the inverter and the motor are fully stopped before you turn the MC on or off. Remove the surge killer integrated with the MC.
- **Installing a magnetic contactor (MC) in the input (primary) circuit**
  Do not turn the magnetic contactor (MC) in the primary circuit on or off more than once an hour as an inverter fault may result. If frequent starts or stops are required during motor operation, use FWD/REV signals.
- **Protecting the motor**
  The electronic thermal facility of the inverter can protect the general-purpose motor. The operation level and the motor type (general-purpose motor, inverter motor) should be set. For high-speed motors or water-cooled motors, set a small value for the thermal time constant to protect the motor.
  If you connect the motor thermal relay to the motor with a long cable, a high-frequency current may flow into the wiring stray capacitance. This may cause the relay to trip at a current lower than the set value for the thermal relay. If this happens, lower the carrier frequency or use the output circuit filter (OFL).
- **Discontinuance of power-factor correcting capacitor**
  Do not mount power factor correcting capacitors in the inverter (primary) circuit. (Use the DC REACTOR to improve the inverter power factor.) Do not use power factor correcting capacitors in the inverter output circuit (secondary). An overcurrent trip will occur, disabling motor operation.
- **Discontinuance of surge killer**
  Do not mount surge killers in the inverter output (secondary) circuit.
- **Reducing noise**
  Use of a filter and shielded wires are typical measures against noise to ensure that EMC Directives are met.
- **Measures against surge currents**
  If an overvoltage trip occurs while the inverter is stopped or operated under a light load, it is assumed that the surge current is generated by open/close of the phase-advancing capacitor in the power system.
  We recommend connecting a DC REACTOR to the inverter.
- **Megger test**
  When checking the insulation resistance of the inverter, use a 500V megger and follow the instructions contained in the Instruction Manual.

Wiring

- **Wiring distance of control circuit**
  When performing remote operation, use the twisted shield wire and limit the distance between the inverter and the control box to 20m.
- **Wiring length between inverter and motor**
  If long wiring is used between the inverter and the motor, the inverter will overheat or trip as a result of overcurrent (high-frequency current flowing into the stray capacitance) in the wires connected to the phases. Ensure that the wiring is shorter than 50m. If this length must be exceeded, lower the carrier frequency or mount an output circuit filter (OFL).
  When wiring is longer than 50m, and sensorless vector control or vector control with speed sensor is selected, execute off-line tuning.
- **Wiring size**
  Select cables with a sufficient capacity by referring to the current value or recommended wire size.
- **Wiring type**
  Do not use multicore cables that are normally used for connecting several inverters and motors.
- **Grounding**
  Securely ground the inverter using the grounding terminal.

Selecting inverter capacity

- **Driving general-purpose motor**
  Select an inverter according to the applicable motor ratings listed in the standard specifications table for the inverter. When high starting torque is required or quick acceleration or deceleration is required, select an inverter with a capacity one size greater than the standard.
- **Driving special motors**
  Select an inverter that meets the following condition: Inverter rated current > Motor rated current.

Transportation and storage

When transporting or storing inverters, follow the procedures and select locations that meet the environmental conditions that agree with the inverter specifications.

Autorizovaný distributor pro ČR a SR

Fuji Electric

Fuji Electric Europe GmbH
European Headquarters
Goethering 58, 63067 Offenbach am Main, Germany
Tel.: +49 (0)69 - 66 90 29 0, Fax: +49 (0)69 - 66 90 29 58
info.inverter@fujielectric-europe.com
www.fujielectric-europe.com

amtek

Amtek, spol. s r.o.
Vídeňská 125, 629 00 Brno
Tel.: 547 125 555 Fax: 547 125 556
mail: fuji@amtek.cz
http://www.amtek.cz/fuji

Information in this catalog is subject to change without notice. **Based on 24A1-E-0042e**